Technical Manual

Honeywell

Sensepoint XCD
Gas Detector

1 Safety

Ensure that this Operating Manual is read and understood **BEFORE** installing / operating / maintaining the equipment. Pay particular attention to **Warnings** and **Cautions**. All document **Warnings** are listed here and repeated where appropriate at the start of the relevant chapter(s) of this Operating Manual. **Cautions** appear in the sections/sub-sections of the document where they apply.

WARNINGS

Sensepoint XCD is designed for installation and use in Zone 1 or 2 hazardous areas in many countries including Europe and for Class 1 Division 1 or 2 area applications in North America.

Installation must be in accordance with the recognized standards of the appropriate authority in the country concerned.

Access to the interior of the detector, when carrying out any work, must only be conducted by trained personnel.

Before carrying out any work ensure local regulations and site procedures are followed. Appropriate standards must be followed to maintain the overall certification of the detector.

For installations where conduit is used, and the sensor is mounted directly to the Sensepoint XCD, there must be a "Seal Fitting" installed for each of the cable gland entries within 18 inches of the Sensepoint XCD. The total distance of the location of these Seal Fittings is 18 inches. (e.g. If all 3 gland entries are to be used, 3 Seal Fittings should be located, each within 6 inches of the wiring entrance).

In order to maintain electrical safety, the product must not be operated in atmospheres with more than 21% oxygen. Oxygen deficient atmospheres (Combustible: less than 10%V/V, Toxic: less than 6%V/V) may suppress the sensor output.

If using an anti-seize compound, the threads should be thinly coated with an approved silicone free compound e.g. petroleum jelly

To reduce the risk of ignition of hazardous atmosphere, de-classify the area or disconnect the equipment from the supply circuit before opening the detector enclosure. Keep assembly tightly closed during operation.

Never attempt to open a junction box/enclosure or replace/refit the sensor in potentially hazardous atmospheres while power is still applied to the transmitter.

The detector must be earthed/grounded for electrical safety and to limit the effects of radio frequency interference. Earth/ground points are provided inside and outside the unit. The internal grounding shall be used as the primary equipment ground. The external terminal is only a supplemental bonding connection where local authorities permit or require such a connection.

Ensure that all screens/instrument earth/clean earth wiring is earthed/grounded at a single point (either at the controller or detector - BUT NOT BOTH) to prevent false readings or alarms that may occur due to potential earth/ground loops.

Take care when handling sensors as they may contain corrosive solutions.
Do not tamper with or in any way disassemble the sensor.
Do not expose to temperatures outside the recommended ranges.
Do not expose sensors under storage conditions to organic solvents or flammable liquids.

At the end of their working life, replacement electrochemical sensors for oxygen and toxic gas must be disposed of in an environmentally safe manner. Disposal should be according to local waste management requirements and environmental legislation.

Alternatively, old replaceable sensors may be securely packaged and returned to Honeywell Analytics clearly marked for environmental disposal.

Electrochemical sensors should NOT be incinerated as this action may cause the cell to emit toxic fumes.

Refer to the local or national regulations relative to the installation at the site. For Europe see EN60079-29-2, EN60079-14, EN45544-4 and EN61241-14.

This equipment is designed and constructed as to prevent ignition sources arising, even in the event of frequent disturbances or equipment operating faults.

The sensor head must be fitted with the supplied weather protection, and mounted so that the sinter is pointing downward to provide ingress protection IPX6.

The weather protection is a potential electrostatic charging hazard. The manufacturer's instructions should be observed.

NOTE: The control card must have a suitably rated fuse.

Special conditions for safe use – Sensepoint XCD with Flammable Sensor:

1. Compliance with the Technical Manual is required for safe use of Sensepoint XCD.
2. The following environmental conditions of operation apply for the use of the Sensepoint XCD:
   Temperature: -25 °C to +55 °C
   Relative humidity: 0 % to 90 %
   Pressure: 80 kPa to 120 kPa
   (extended range for temperature and humidity according to EN 60079-29-1)
3. In order to minimise measurement errors, the ambient conditions (temperature, pressure, humidity) during the calibration of the measuring channels should be as close as possible to those to be encountered during normal operation.
4. Measuring values from -4 %LEL to +2 %LEL are indicated as "0 %LEL" (4 mA analogue output) in the measuring mode. Below -4 %LEL is indicated as “-0” (3.5 mA) and below -5 %LEL (1 mA) a fault “F03” message is given additionally.
5. Measuring values beyond the end of the measuring range are indicated as 100 %LEL and alternately blinking “W04” and “W05”. The analogue output is set to 22 mA.
6. Special states for Analogue output:
   - ≤ 1 mA: System and other faults
   - 2 mA: Start up, Inhibit
   - 3.5 mA Under range
   - 22 mA: Over range
7. If the Sensepoint XCD is operating in conjunction with a control unit to analyse the measuring signal, the control unit must operate correctly when the XCD transmits a value outside of the measuring range.
8. If substances (e. g. sensor poisons) that could interfere with and affect the sensitivity of the sensing device are to be expected in the atmosphere to be monitored which may cause a rapid change of sensitivity, the calibration interval shall be reduced.
9. Before use, ensure that any alarm delay set is suitable for the intended application.
10. Some types and concentrations of dust in the measured atmosphere may impair the measuring function of the gas detector.
11. Use only with the Weather Protection Cup accessory (P/N SPXCDWP).
12. The EC-Type examination certificate only applies to the measuring of Methane, Ethane and Propane in air and up to the Lower Explosive Limit (LEL). Additional subtests of an ATEX notified body are required for the measuring of other flammable gases, the results being informed about as addition to this certificate.

Special conditions for Sensepoint XCD with Oxygen Sensor:

1. Compliance with the Technical Manual is required for safe use of Sensepoint XCD.
2. The following environmental conditions of operation apply for the use of Sensepoint XCD with oxygen sensor:
   Temperature: -20 °C to +55 °C
   Relative humidity: 20 % to 90 %
   Pressure: 80 kPa to 120 kPa
   (extended range for temperature according to EN 50104)

3. In order to minimise measurement errors, the ambient conditions (temperature, pressure, humidity) during the calibration of the measuring channels should be as close as possible to those to be encountered during normal operation.
4. Measuring values from 20.7 % (v/v) up to 21.1 % (v/v) are indicated as "20.9" % (v/v) oxygen during operation in the measuring mode. Measuring values below 3 % (v/v) oxygen are indicated as 0 % (v/v) oxygen (analogue output 4 mA).
5. Measuring values above the end of the measuring range are indicated as 25 % (v/v) O_2 and blinking “W04”. The analogue output is set to 22 mA.

   Fault messages are shown on the display as “F-XX” and the analogue output is set to 1 mA.
6. Special states for Analogue output:
   - ≤ 1 mA: System and other faults
   - 2 mA: Start up, Inhibit
   - 22 mA: Over ranging
7. If the Sensepoint XCD is operating in conjunction with a control unit to analyse the measuring signal, the control unit must operate correctly when the XCD transmits a value outside of the measuring range.
8. Use without Weather Protection Cup accessory (P/N SPXCDWP), only.
9. If substances (e. g. sensor poisons) that could interfere with and affect the sensitivity of the sensing device are to be expected in the atmosphere to be monitored which may cause a rapid change of sensitivity, the calibration interval shall be reduced.
10. Before use, ensure that any alarm delay set is suitable for the intended application.
11. Before use, consideration must be given to cross sensitivity to other gases. Refer to the Sensepoint XCD Technical Manual and the Sensor Datasheet for cross interference data.
12. Some types and concentration of dust in the measured atmosphere may impair the measuring function of the gas detector.
13. The Type Examination Certificate applies to the measurement of oxygen up to 25 % (v/v).

2 Information

This manual is for use with the Sensepoint XCD range transmitters only.

The Start-up/Surge/In rush current is dependant on the type of power supply used. The typical start-up current for Sensepoint XCD is less than 800mA. Measure the start-up current using the specific power supply before installation to ensure suitability for your application.

Honeywell Analytics can take no responsibility for installation and/or use of its equipment if not done so in accordance with the appropriate issue and/or amendment of the Operating Manual.

The reader of this Operating Manual should ensure that it is appropriate in all details for the exact equipment to be installed and/or operated. If in doubt, contact Honeywell Analytics for advice.

The following types of notices are used throughout this Operating Manual:

WARNING

Identifies a hazardous or unsafe practice which could result in severe injury or death to personnel.

Caution: Identifies a hazardous or unsafe practice which could result in minor injury to personnel, or product or property damage.

Note: Identifies useful/additional information.

Every effort has been made to ensure the accuracy of this document, however, Honeywell Analytics can assume no responsibility for any errors or omissions in this document or their consequences.

Honeywell Analytics would greatly appreciate being informed of any errors or omissions that may be found in the content of this document.

For information not covered in this document, or if there is a requirement to send comments/corrections about this document, please contact Honeywell Analytics using the contact details given on the back page.

Honeywell Analytics reserve the right to change or revise the information supplied in this document without notice and without obligation to notify any person or organization of such revision or change. If information is required that does not appear in this document, contact the local distributor/agent or Honeywell Analytics.

3 Table of contents

1 Safety 2
2 Information 5
3 Table of contents 6
4 Introduction 8
4.1 Transmitter 9
4.2 Flammable, Toxic Oxygen Gas sensors 9
4.3 Accessories 10
4.4 Options 12
4.4.1 Modbus® 12
5 Installation 14
5.1 Mounting and location 15
5.2 Mounting the transmitter 15
5.3 Installing the sensor 17
6 Electrical connections 18
6.1 Transmitter Wiring 19
6.2 Terminal connections 20
6.3 Power 21
6.3.1 For ATEX/IECEx/AP Versions 21
6.3.2 For UL/CSA Versions 22
6.4 Cabling 23
6.5 Cable and Earth/Ground regimes 23
6.6 Ground Terminal Wiring 24
7 Default configuration 25
8 Normal Operation 26
8.1 Display Screen 26
8.2 System Status 27
8.3 Magnetic Wand Activation 28
8.4 Operation Mode Structure 28
9 First time switch on (Commissioning) 29
10 Response Check and Calibration 31
10.1 Zeroing and span calibration 31
10.2 Zeroing and span calibration of Hydrogen Sulfide sensors 34
11 General Maintenance 35
11.1 Operational Life 35
12 Servicing 36
12.1 Sensor replacement 36
12.2 Replacing Modules within the Transmitter 38
12.3 Faults and Warnings 39
13 Menu’s and Advanced Configuration 40
13.1 Abort Function 40
13.2 Configuration Mode 40
13.2.1 Configuration mode operation table 43

13.3 Sensor / Gas Selection 45
13.3.1 Sensor Selection 45
13.3.2 Gas Selection 45
13.4 Review Mode 47
14 General specification 50
15 Ordering information 52
16 Warranty statement 54
17 Installation Drawing 55
17.1 Mechanical Installation Drawing 55
17.2 Electronic Connection Drawing 56
17.3 Duct Mounting Drawing 57
17.4 Collecting Cone Drawing 58
17.5 Mounting Bolt Assy Drawing 59
17.6 Mounting Bracket Drawing 60
18 Certification 61
18.1 China GB Ex and PA 61
18.2 Korea KTL 64
18.3 European ATEX 65
18.4 International IEC 68
18.5 ATEX Name Plate 70
18.6 UL Name Plate 71
18.7 Sensepoint XCD Warning Tag 72
18.8 Sensor Cartridges Label 73
18.9 EC Declaration of Conformity 74
19 Cross Interference and Cross Calibration 75
19.1 Cross Interference Table for Toxic and Oxygen 75
19.2 Cross Calibration Flammable Gas Detector 76
19.3 Meter Multiplication Factors for Sensepoint XCD-IR Propane 79
Appendix A - Modbus® Protocol A-2 80
Appendix A - A.2 Modbus Registers 81

4 Introduction

The Sensepoint XCD (“Exceed”) comprises a gas detector transmitter and a choice of sensors for detecting flammable gas, toxic gas and oxygen. The construction of Sensepoint XCD allows it to be used in hazardous area locations; it may also be used in other areas not classified as hazardous.

As well as a comprehensive range of Sensepoint XCD sensors, a wide range of existing Honeywell Analytics sensors may be used with the Sensepoint XCD transmitter to detect a broader range of target gases (please contact Honeywell Analytics for further details).

The transmitter features a display and three programmable relays for controlling external equipment e.g. alarms, sirens, valves or switches. The transmitter provides an industry standard 3-wire, 4-20mA source or sink output for connection to a dedicated gas detection control system or PLC.

Calibration and maintenance is carried out using a Magnetic Wand, this allows a single user to undertake routine maintenance without needing to access internal components. Sensepoint XCD is suitable for use in Zone 1 or 2 hazardous areas (International) or Class I Division 1 or 2 area applications (North America).

Sensepoint XCD comprises of the main parts as shown below.

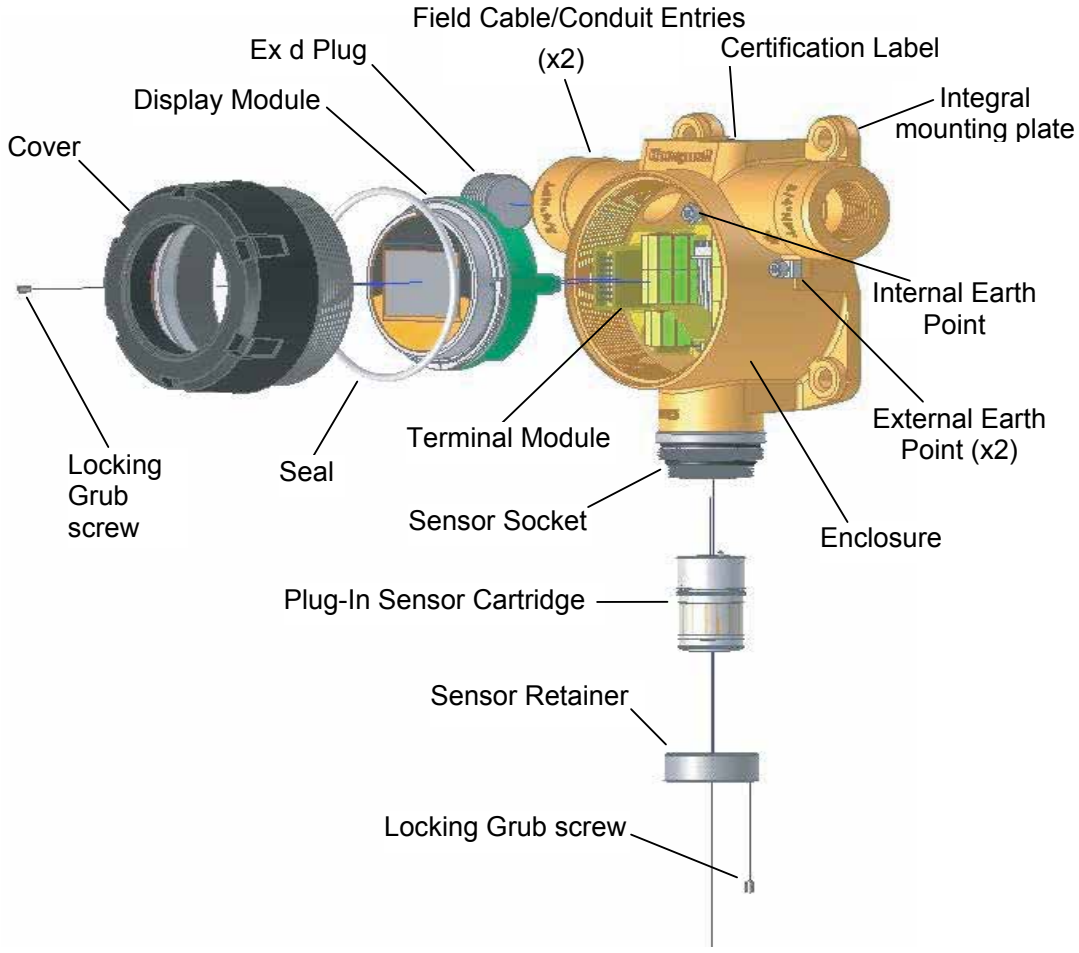

Diagram 1. – Exploded View

4.1 Transmitter

The transmitter enclosure has three threaded entries. The two cable/conduit entries either side of the upper part of the transmitter housing are for connecting the power source, signal output and relay contacts to associated signalling equipment. The bottom entry allows direct connection of the sensor socket. There is a mounting plate incorporated into the transmitter housing allowing for various mounting configuration options.

A local LCD provides gas type, concentration, alarm and operating status. The display provides numerical, bar graph and icon information.

Diagnostic information may also be displayed when the transmitter is interrogated using a magnet. The transmitter cover has a glass window which allows use of the Magnetic Wand to activate the three user interface magnetic switches that are located on the front of the display module. The magnet also enables a non intrusive, one-man calibration and configuration facility for the Sensepoint XCD.

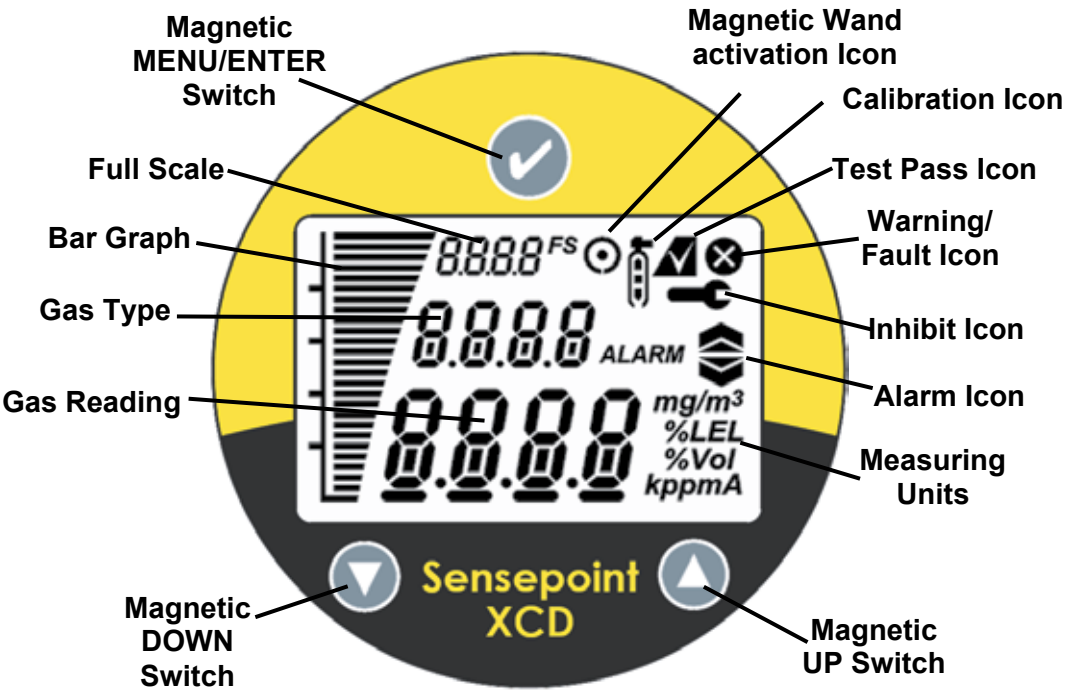

Diagram 2: Sensepoint XCD Display and Magnetic Switches

4.2 Flammable, Toxic and Oxygen Gas sensors

The Sensepoint XCD transmitter is designed to work with a variety of gas sensors for detecting flammable gases. Sensepoint XCD sensors use NDIR infrared and electro-catalytic technologies.
In addition, the Sensepoint XCD transmitter is designed to work with a wide range of toxic gas sensors. Sensepoint XCD sensors for monitoring toxic gas or oxygen use electro-chemical cell (ECC) technology. Oxygen sensors measure Oxygen deficiency and enrichment in the range 0 - 25 %V/V. They do not measure inertization.

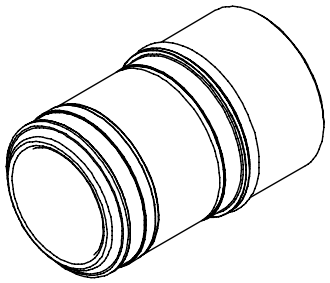

Diagram 3: Sensepoint XCD Flammable, Toxic and Oxygen Sensor Cartridge

4.3 Accessories

A range of accessories are available to allow use of Sensepoint XCD in a wide variety of applications. These including mounting brackets, maintenance tools, weather housings, flow housing, collecting cone, duct mounting kit and sensor junction boxes.

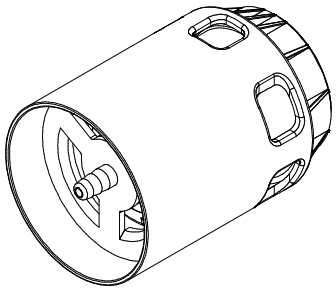

Standard Weather Protection

The Standard Weather Protection (P/N: SPXCDWP) is designed to protect the sensor from changes in environmental conditions. This is recommended to be fitted to a Sensepoint XCD sensor for outdoor exposed applications, (supplied with XCD kit).

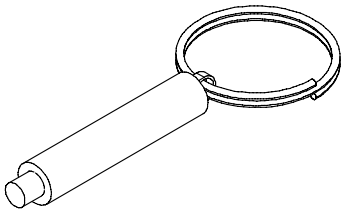

Magnetic wand

The magnetic wand (P/N: SPXCDMAG) is used as a tool to allow the user to communicate with the Sensepoint XCD transmitter for the purpose of configuration, calibration and interrogating system status, (supplied with XCD kit).

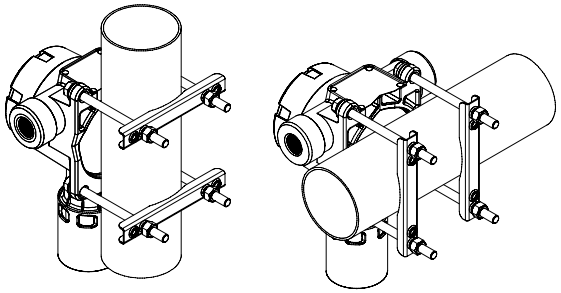

Pipe mounting bracket

The Pipe Mounting Bracket (P/N: SPXCDMTMB) is an optional accessory and may be used to allow the Sensepoint XCD to be installed onto a dedicated mounting post or existing structure at the desired location.

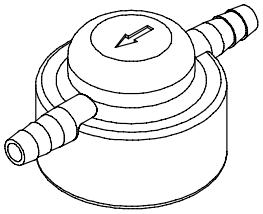

Gassing Cap

The Gassing Cap (P/N: S3KCAL) is an optional accessory that may be temporarily fitted to the sensor in place of the Weather Protection for Gas Response checking during commissioning and routine maintenance.

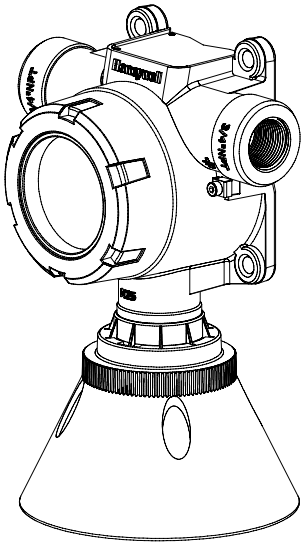

Collecting cone

The Collecting Cone (P/N: SPXCDCC) is an optional accessory that may be fitted to the Weather Protection. The collecting cone is designed for use with lighter than air.

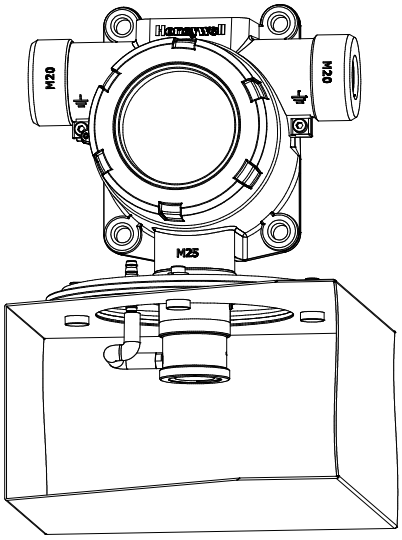

Duct mounting kit

The Duct Mounting Kit (P/N: SPXCDDMK) is an optional accessory that is designed for applications to allow the monitoring for the presence of gas inside a Heating, Ventilation or Air Conditioning (HVAC) duct is required.

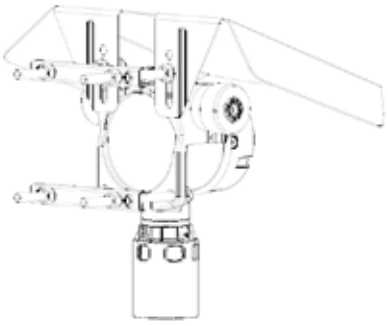

Sunshade Deluge Cover

The XCD Sunshade Deluge Cover (P/N: SPXCDSDP) is an optional accessory that may be fitted to the integral mounting plate. This accessory is designed to protect XCD from overheating in exposed hot and arid climates, particularly offering additional protection from thermal shock in Tropical Environments

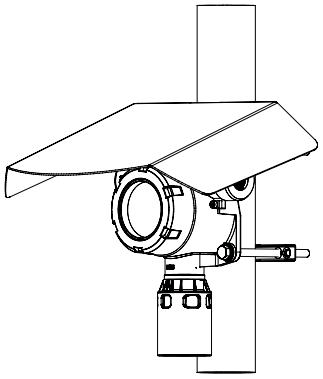

Typical Mounting Arrangement

4.4 Options

4.4.1 Modbus® (*Modbus option not tested as part of the performance approvals*)

One of the most common field buses in the industry, the optional Modbus® interface allows the XCD to connect to a bus of devices and transmit data to PLCs or controllers (see Appendix A). Connections to the XCD are made through a pluggable terminal block on the Modbus® interface circuit board. Modbus® RTU protocol uses ASCII/Hex protocols for communication. and allows all transmitter/sensor front panel functions to be transmitted using this industrial fieldbus. Modbus® protocol is a Master-Slaves protocol. Only one master (at the same time) is connected to the bus and one or up to 32 slave nodes are also connected to the same serial bus. Modbus® communication is always initiated by the master. The slave nodes will never transmit data without receiving a request from the master node. The slave nodes will never communicate with each other. The master node initiates only one Modbus® transaction at the same time.
Modbus® option is available only for selected gases. Please refer to chapter 15 Ordering information.
To find out if a unit has the Modbus® option fitted, look at the part number on the product label. Units fitted with Modbus® have the letter “M” at the end of the part number.

Note: MODBUS® is a registered trademark of Schneider Automation Inc.

(MODBUS ID SETTING)

Set id>>Set ModBus slave ID>>Set Baud rate>>Set Parity

1) Slave ID shall be set 1~247
2) Baud rate setting 9600 or 19200
3) Parity setting (No, Even, Odd)

From the Configuration Mode screen, select '✓'. To set the ModBus Slave ID, use the updown '▲▼'switches to move to the desired position and use '✓' to select it. Again, using the'▲▼'switches, increment or decrement the value until the desired value appears, selects the value and moves to the next setting.

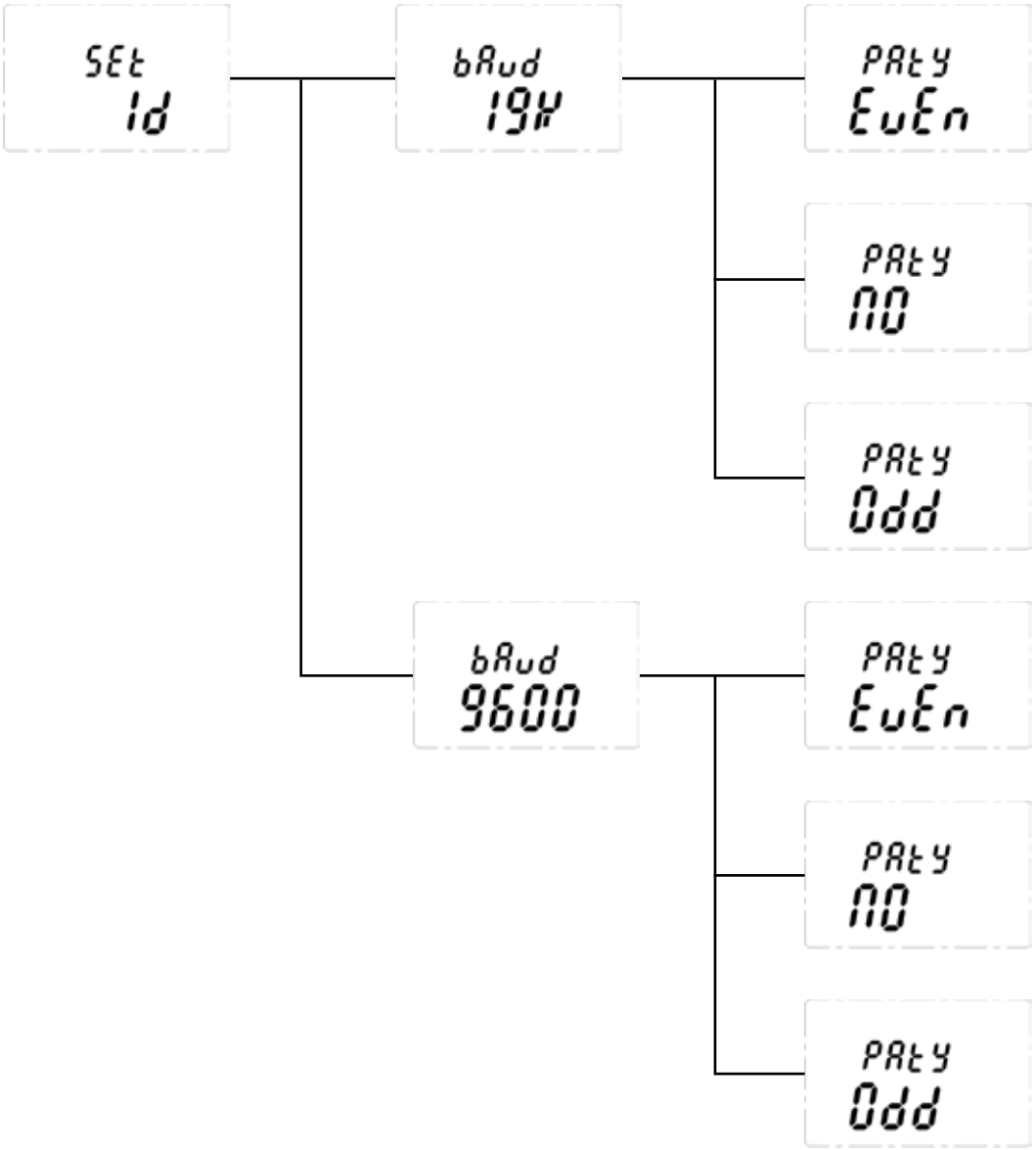

The communications baud rate and Parity Setting can also be set from this screen by using the'▲▼' switches to navigate to the baud rate display then selecting '✓'. Using the '▲▼'switches, highlight the proper baud rate or parity setting and select'✓'. Default is Slave ID 1, 19200bps and even parity.

Note: Set ID menu is available only for XCD equipped with Modbus option.

5 Installation

WARNINGS

Sensepoint XCD is designed for installation and use in Zone 1 or 2 hazardous areas in many countries including Europe and for Class 1 Division 1 or 2 area applications in North America.
Installation must be in accordance with the recognized standards of the appropriate authority in the country concerned.

Access to the interior of the detector, when carrying out any work, must only be conducted by trained personnel.

Before carrying out any work ensure local regulations and site procedures are followed. Appropriate standards must be followed to maintain the overall certification of the detector.

Care should be taken when removing and refitting the Sensepoint XCD plug-in Sensor to the Sensor Socket so that damage to the connection pins can be avoided.

For installations where conduit is used, and the sensor is mounted directly to the Sensepoint XCD, there must be a "Seal Fitting" installed for each of the cable gland entries within 18 inches of the Sensepoint XCD. For installations where the sensor will be mounted remotely from Sensepoint XCD, an additional "Seal Fittings" will be required: One at each of the conduit entries for the power/signal/relay contact outputs and one at the sensor wiring entrance. The total distance of the location of these Seal Fittings is 18 inches. (e.g. If all 3 gland entries are to be used, 3 Seal Fittings should be located, each within 6 inches of the wiring entrance).

If using an anti-seize compound, the threads should be thinly coated with an approved silicone free compound e.g. petroleum jelly

To reduce the risk of ignition of hazardous atmosphere, de-classify the area or disconnect the equipment from the supply circuit before opening the detector enclosure. Keep assembly tightly closed during operation.

Never attempt to open a junction box/enclosure or replace/refit the sensor in potentially hazardous atmospheres while power is still applied to the transmitter.

The detector must be earthed/grounded for electrical safety and to limit the effects of radio frequency interference. Earth/ground points are provided inside and outside the unit. Ensure that all screens/instrument earth/clean earth wiring is earthed/grounded at a single point (either at the controller or detector - BUT NOT BOTH) to prevent false alarms due to earth/ground loops.

Take care when handling sensors as they may contain corrosive solutions.
Do not tamper with or in any way disassemble the sensor.
Do not expose to temperatures outside the recommended ranges.
Do not expose sensors under storage conditions to organic solvents or flammable liquids.

At the end of their working life, replacement electrochemical sensors for oxygen and toxic gas must be disposed of in an environmentally safe manner. Disposal should be according to local waste management requirements and environmental legislation.
Alternatively, old replaceable sensors may be securely packaged and returned to Honeywell Analytics clearly marked for environmental disposal.

Electrochemical sensors should NOT be incinerated as this action may cause the cell to emit toxic fumes.

Refer to the local or national regulations relative to the installation at the site. For Europe see EN60079-29-2, EN60079-14, EN45544-4 and EN61241-14.

This equipment is designed and constructed as to prevent ignition sources arising, even in the event of frequent disturbances or equipment operating faults.

The sensor head must be fitted with the supplied weather protection, and mounted so that the sinter is pointing downward to provide ingress protection IPX6.

The weather protection is a potential electrostatic charging hazard. The manufacturer's instructions should be observed.

NOTE: The control card must have a suitably rated fuse.

5.1 Mounting and location

Caution: The location of gas detectors should be made in accordance with any relevant local and national legislation, standards or codes of practice. Always replace sensors with a sensor of the same type.

Gas detectors should be mounted where a potential hazard of gas is most likely to be present. The following points should be noted when locating gas sensors.

- When locating detectors consider the possible damage caused by natural events e.g. rain or flooding.
- Consider ease of access to the gas detector for functional testing and servicing.
- Consider how escaping gas may behave due to natural or forced air currents.

Note: The placement of gas detectors should be determined following the advice of experts having specialist knowledge of gas dispersion, experts having knowledge of the process plant system and equipment involved, safety and engineering personnel. The agreement reached on the location of detectors should be recorded.

5.2 Mounting the transmitter

The Sensepoint XCD transmitter has an integral mounting plate consisting of four mounting holes on the transmitter body. The transmitter may be fixed directly to a surface mounting, or to a horizontal or vertical pipe/structure, 40.0-80.0mm (1.6 to 3.1 inches) in diameter/cross section. The Pipe Mounting Bracket accessory (optional accessory) may be used for this purpose.

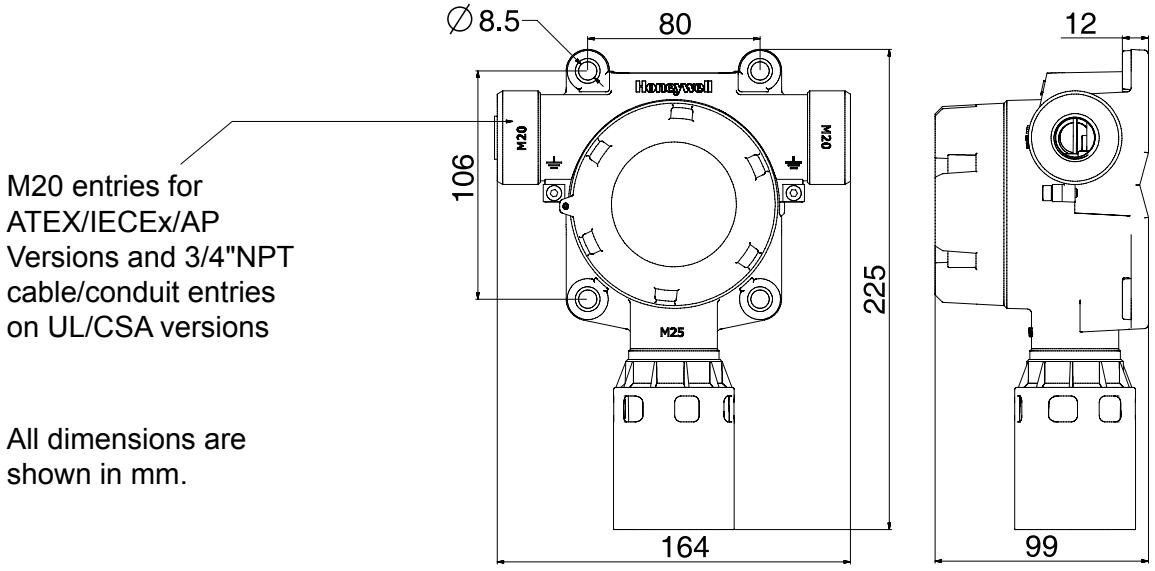

Diagram 4: Outline and mounting dimensions

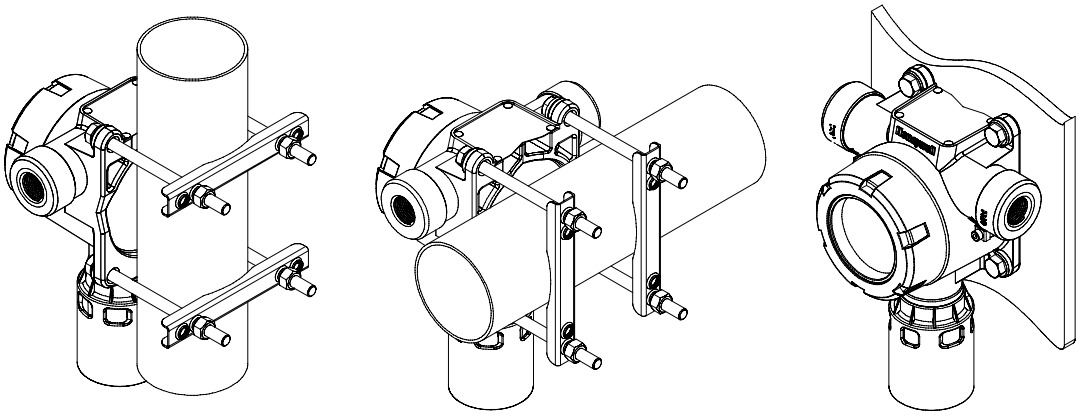

Diagram 5: Mounting arrangements

To mount the Sensepoint XCD transmitter to a Vertical or Horizontal pipe/structure, use the optional XCD Mounting Kit and following procedure:

1. Fit the four spring washers, then the plain washers to the M8 x 80mm SS316 bolts.
2. Pass the four bolts through the four mounting holes of the transmitter housing.
3. **Note:** If the XCD sunshade is to be used then fit the sunshade and the two locking bolts and washers to the M8 x 80 bolts.
4. Place the transmitter housing against the mounting position and fit the two “U” channel mounting bars the other side of the Pipe/Structure.
5. Secure bolts to the threaded holes of the “U” channel mounting bars.
6. Tighten the four bolts securely, (but do not over-tighten) until the transmitter housing cannot be moved by hand on its mounting position.

Note: For further details of installation please see section 17.

5.3 Installing the sensor

The XCD gas sensor cartridge plugs into the XCD Sensor Socket.

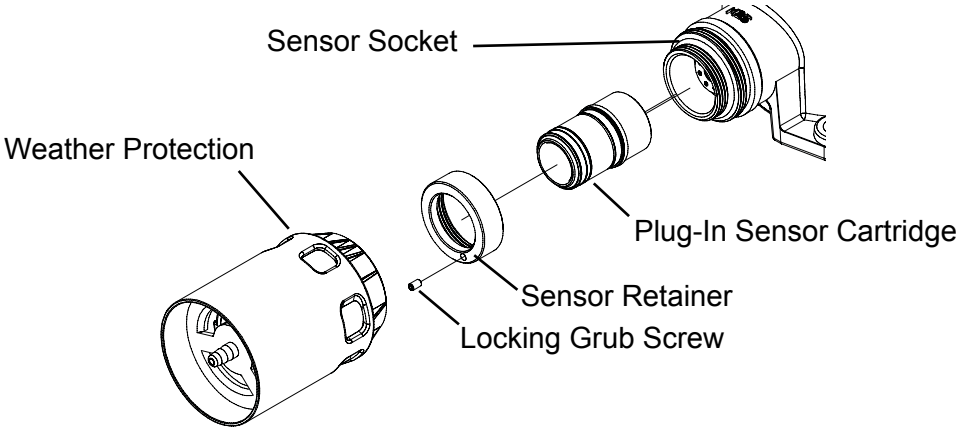

Diagram 6: Installing the Sensor

WARNINGS

Care should be taken when removing and refitting the Sensepoint XCD plug-in Sensor to the Sensor Socket so that damage to the connection pins can be avoided.

If using an anti-seize compound, the threads should be thinly coated with an approved silicone free compound e.g. petroleum jelly

Take care when handling old sensors as they may contain corrosive solutions.

Take care when removing or replacing the Sensor Retainer as there may be sharp edges present on the adjoining threads.

The equipment is designed and constructed as to prevent ignition sources arising, even in the event of frequent disturbances or equipment operating faults.

The sensor head must be fitted with the supplied weather protection, and mounted so that the sinter is pointing downward to provide ingress protection IPX6.

The weather protection is a potential electrostatic charging hazard. The manufacturer's instructions should be observed.

To install the XCD Sensor Cartridge to the XCD Sensor Socket:

1. Remove the weather protection (if fitted) from the sensor.
2. Use a 1.5mm Allen key (hexagonal wrench-included) to loosen the Locking Grub Screw on the Sensor Retainer.
3. Unscrew and remove the Sensor Retainer.
4. Remove the XCD Sensor Cartridge from its packaging and plug it into the XCD Sensor Socket, taking care to align the sensor pins with the connector.
5. Refit the Sensor Retainer and tighten the Locking Grub Screw.
6. Refit the weather protection (as required) to the XCD sensor.

6 Electrical connections

WARNINGS

Sensepoint XCD is designed for installation and use in Zone 1 or 2 hazardous areas in many countries including Europe and Class 1 Division 1 or 2 area applications in North America. Installation must be in accordance with the recognized standards of the appropriate authority in the country concerned.

Access to the interior of the detector, when carrying out any work, must only be conducted by trained personnel.

Before carrying out any work ensure local regulations and site procedures are followed. Appropriate standards must be followed to maintain the overall certification of the detector.

Care should be taken when removing and refitting the Sensepoint XCD Sensor Cartridge to the Sensor Socket so that damage to the connection pins can be avoided.

For installations where conduit is used, and the sensor is mounted directly to the Sensepoint XCD, there must be a "Seal Fitting" installed for each of the cable gland entries within 18 inches of the Sensepoint XCD. The total distance of the location of these Seal Fittings is 18 inches. (e.g. If all 3 gland entries are to be used, 3 Seal Fittings should be located, each within 6 inches of the wiring entrance).

If using an anti-seize compound, the threads should be thinly coated with an approved silicone free compound e.g. petroleum jelly

To reduce the risk of ignition of hazardous atmosphere, de-classify the area or disconnect the equipment from the supply circuit before opening the detector enclosure. Keep assembly tightly closed during operation.

Never attempt to open a junction box/enclosure or replace/refit the sensor in potentially hazardous atmospheres while power is still applied to the transmitter.

The detector must be earthed/grounded for electrical safety and to limit the effects of radio frequency interference. Earth/ground points are provided inside and outside the unit. Ensure that all screens/instrument earth/clean earth wiring is earthed/grounded at a single point (either at the controller or detector - BUT NOT BOTH) to prevent false alarms due to earth/ground loops.

Take care when handling sensors as they may contain corrosive solutions.
Do not tamper with or in any way disassemble the sensor.
Do not expose to temperatures outside the recommended ranges.
Do not expose sensors under storage conditions to organic solvents or flammable liquids.

At the end of their working life, replacement electrochemical sensors for oxygen and toxic gas must be disposed of in an environmentally safe manner. Disposal should be according to local waste management requirements and environmental legislation.
Alternatively, old replaceable sensors may be securely packaged and returned to Honeywell Analytics clearly marked for environmental disposal.

Electrochemical sensors should NOT be incinerated as this action may cause the cell to emit toxic fumes.

Refer to the local or national regulations relative to the installation at the site. For Europe see EN60079-29-2, EN60079-14, EN45544-4 and EN61241-14.

6.1 Transmitter Wiring

Caution: All electrical connections should be made in accordance with any relevant local or national legislation, standards or codes of practice.

The Sensepoint XCD transmitter may be wired in either Current SOURCE or Current SINK configuration. These two options are offered to allow greater flexibility in the type of control system that it can be used with. SOURCE/SINK is selectable via the switch located on the back side of the display module; accessible by removing the display module during installation / commissioning (see section 9).

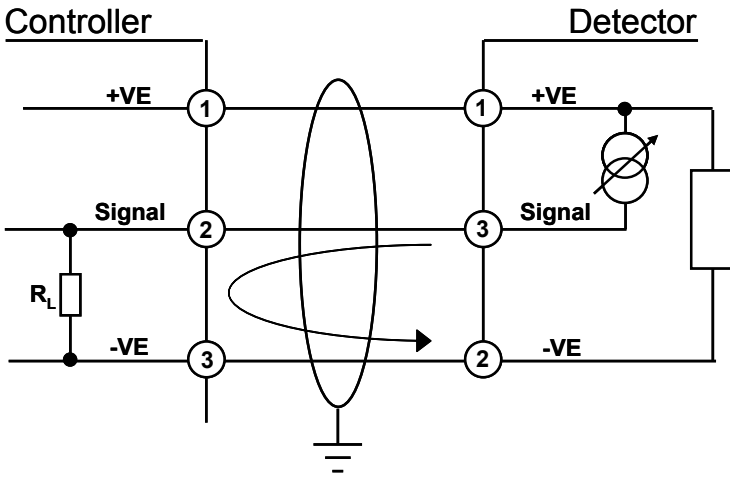

XCD Source 3 Wire 4-20mA (Source)

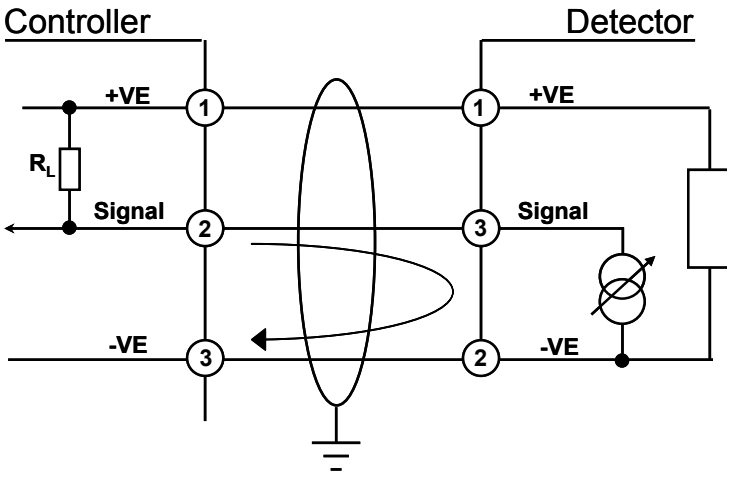

XCD Sink 3 Wire 4-20mA (Sink)

Note: Terminate cable screen at detector or controller, not both.
250ohm load resistor (RL) is installed in the factory, In case of connection with controller, this resistor should be removed because controller has load resistor internally.

6.2 Terminal connections

Note: Ensure that none of the wires in the terminal area cause an obstruction when refitting the Display Module. Ensure that the socket on the Display Module is fully engaged in the Display Module Connector on the Terminal Module.

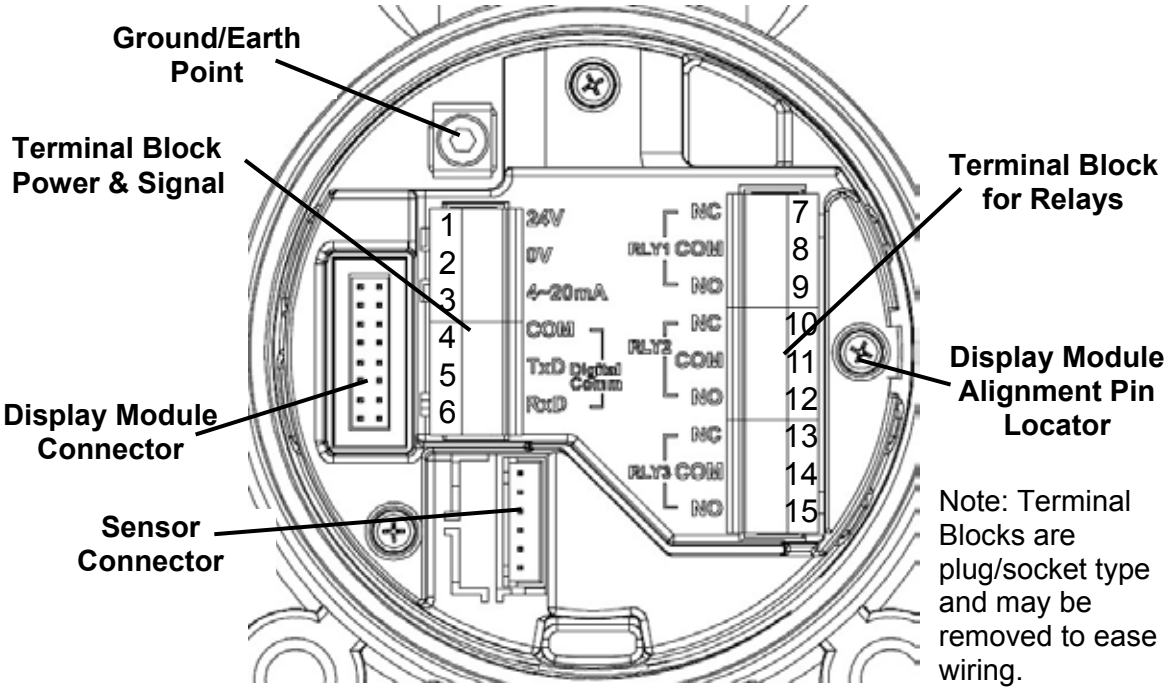

Diagram 7: Terminal module

Terminal Module Connections			
Terminal Number	**Marking**	**Connection**	**Description**
1	24V	+VE Supply	Controller Connections
2	0V	-VE Supply(0VDC)	
3	4~20mA	Current Output Signal	
4	COM	Drain	MODBUS RTU. RS485 (Optional)
5	TxD	MODBUS B (+)	
6	RxD	MODBUS A (-)	
7	RLY1/NC	Normally Closed	Programmable Relay 1 (Default A1)
8	RLY1/COM	Common	
9	RLY1/NO	Normally Open	
10	RLY2/NC	Normally Closed	Programmable Relay 2 (Default A2)
11	RLY2/COM	Common	
12	RLY2/NO	Normally Open	
13	RLY3/NC	Normally Closed	Programmable Relay 3 (Default Fault)
14	RLY3/COM	Common	
15	RLY3/NO	Normally Open	

Table 1: Transmitter terminal connections

6.3 Power

6.3.1. For ATEX/IECEx/AP Versions

The Sensepoint XCD transmitter (ATEX/IECEx/AP Versions) requires a power supply from the controller of between 16Vdc and 32Vdc. Ensure that a minimum supply of 16Vdc is measured at the sensor, taking into account the voltage drop due to cable resistance.

The maximum loop resistance in the field cable is calculated as follows:

$$R_{loop} = (V_{controller} - V_{detector\ min}) / I_{detector}$$

Example;

The controller is supplying a nominal 24Vdc **($V_{controller}$)**, the detector minimum allowable voltage is 16Vdc **($V_{detector\ min}$)**, therefore the maximum allowable voltage drop between the controller and detector is 8Vdc; this means a voltage drop of 4V in each core (+ve core and -ve core).

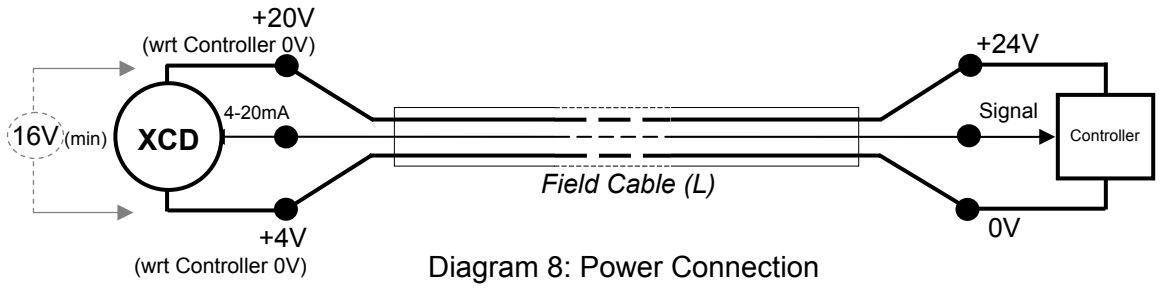

Diagram 8: Power Connection

Power consumption of the detector is 5.0W. The current required to drive the detector at the minimum voltage is (I = P / V), 5.0 / 16 = 312.5mA (I detector).

So, the maximum field cable loop resistance (R loop) = 8 / 0.31 = 26 Ohms, or 13 Ohms per core, (allowing for component variations, losses, etc.).

The following tables show the maximum cable distances between the controller and transmitter assuming a voltage drop of 4V in each core and for different cable parameters. The tables are examples only and actual cable parameters and source power supply voltage for the application should be used to calculate the maximum cable distance allowed at the installation site.

Typical cable data		Maximum Cable length (L)**	
Cable size (cross sectional area)	Cable resistance Ω/km (Ω/mi)	Meters	Feet
0.5mm^2 (20AWG*)	36.8 (59.2)	353	1158
1.0mm^2 (17AWG*)	19.5 (31.4)	666	2185
1.5mm^2 (16AWG*)	12.7 (20.4)	1023	3356
2.0mm^2 (14AWG*)	10.1 (16.3)	1287	4222
2.5mm^2 (13AWG*)	8.0 (12.9)	1621	5318
*nearest equivalent	**example for 24Vdc supply voltage		

Table 2: Maximum cable distances

6.3.2. For UL/CSA Versions

The Sensepoint XCD transmitter (UL/CSA Versions) requires a power supply from the controller of between 12Vdc and 32Vdc. Ensure that a minimum supply of 12Vdc is measured at the sensor, taking into account the voltage drop due to cable resistance.

The maximum loop resistance in the field cable is calculated as follows:

$$R_{loop} = (V_{controller} - V_{detector\ min}) / I_{detector}$$

Example;

The controller is supplying a nominal 24Vdc ($V_{controller}$), the detector minimum allowable voltage is 12Vdc ($V_{detector\ min}$), therefore the maximum allowable voltage drop between the controller and detector is 12Vdc; this means a voltage drop of 6V in each core (+ve core and -ve core).

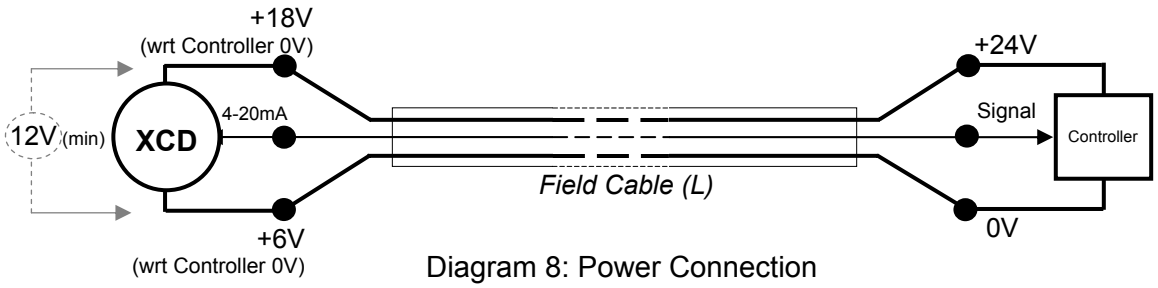

Diagram 8: Power Connection

Power consumption of the detector is 5.0W. The current required to drive the detector at the minimum voltage is (I = P / V), 5.0 / 12 = 416.7mA (I detector).

So, the maximum field cable loop resistance (R loop) = 12/0.42 = 28.8 Ohms, or 14.4 Ohms per core, (allowing for component variations, losses, etc.).

The following tables show the maximum cable distances between the controller and transmitter assuming a voltage drop of 4V in each core and for different cable parameters. The tables are examples only and actual cable parameters and source power supply voltage for the application should be used to calculate the maximum cable distance allowed at the installation site.

Typical cable data		Maximum Cable length (L)**	
Cable size (cross sectional area)	Cable resistance Ω/km (Ω/mi)	Meters	Feet
0.5mm^2 (20AWG*)	36.8 (59.2)	391	1284
1.0mm^2 (17AWG*)	19.5 (31.4)	738	2421
1.5mm^2 (16AWG*)	12.7 (20.4)	1134	3727
2.0mm^2 (14AWG*)	10.1 (16.3)	1426	4665
2.5mm^2 (13AWG*)	8.0 (12.9)	1800	5894
*nearest equivalent	**example for 24Vdc supply voltage		

6.4 Cabling

Caution: All unused and used cable/conduit entries must be sealed with a suitable certified sealing plug and cable gland.

The use of industrial grade, suitably armoured field cable is recommended.

For example, screened 3 cores (plus screen 90% coverage), suitably mechanically protected copper cable with a suitable M20 explosion-proof gland, or ¾" NPT steel conduit, with 0.5 to 2.5 mm2 (20 to 13 AWG) conductors. Ensure the cable gland is installed correctly and fully tightened. All unused cable/conduit entries must be sealed with a suitable certified sealing plug (one plug is supplied).

Type	Cable Spec	Max Length
Modbus	AWM2464 AWG26~AWG12 Shield	1000meters

6.5 Cable and Earth/Ground regimes

Effective Earth/Ground bonding is important to ensure good EMC and RFI immunity.

The following diagrams show examples of how to earth/ground bond the cable at enclosures. The same principles apply to conduit installations. These bonding techniques provide good RFI/EMC performance. Earth/ground loops must be avoided to prevent the risk of false signal variation.

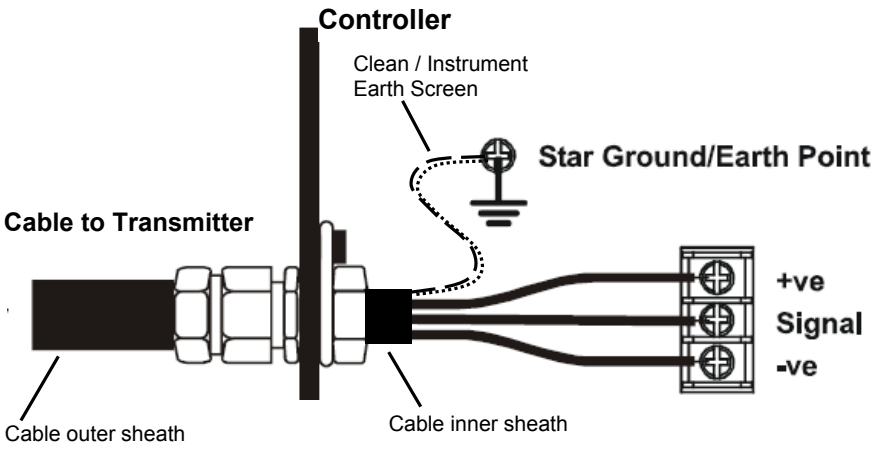

Diagram 9: Controller Grounding

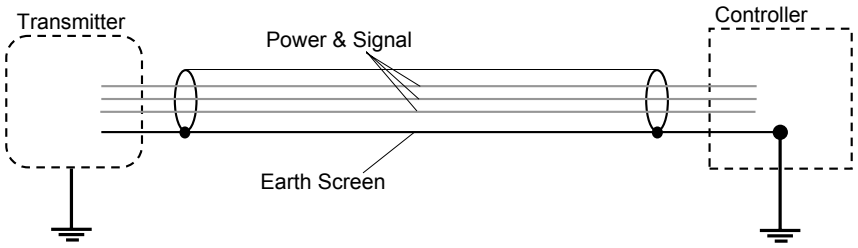

Diagram 10: System grounding

The Earth Screen of the field cable should be “tied to Earth” or connected to Ground at one point only. It is common practise to adopt a STAR EARTH connection regime where all instrumentation Screens are connected at one common point.
The Screen at the other end of the cable should be “parked” or terminated into a blank terminal.

The following diagrams show how to install the wire into the ground screw of the enclosure.

Loosen the bolt **Insert cable** **Fasten the bolt**

6.6 Ground Terminal Wiring

Internal Ground connection: Utilize the shield of the wiring cable recommended in the wiring instructions. For connection to this terminal. Twist the shield wire to avoid stray shield wires, Loosen the screw sufficiently and wrap the wire around the screw in a “U” shape. Raise the clamp and place the wire between the clamp and ground base, lower the clamp and tighten the screw to 6.9lb-in torque.

External Ground Connection: If required by local authority, Utilize a No 14 AWG copper, (Stranded or Solid), wire. Loosen the screw sufficiently to enable ‘wrapping the wire around the screw in a “U” shape. Raise the clamp and place the wire between the clamp and ground base, lower the clamp and tighten the screw to10.4lb-in torque.

7 Default configuration

The Sensepoint XCD transmitter is supplied with the following default configuration.

Function	Value/Setting	Meaning
Sensor Type	Automatic according to Sensor type connected	XCD recognizes the XCD sensor cartridge according to the gas type within its own sensor family i.e. mV, EC or O_2 .
Signal output	≥0.0<1.0 mA	Fault (refer to table 5 section 12.3 for details)
	2.0 mA or 4.0 mA (17.4mA)	Inhibit (during configuration/user settings) For Oxygen, 2.0 mA or 17.4 mA
	4.0 mA to 20.0 mA	Normal gas measurement
	22.0 mA	Maximum over range
Alarm Relay 1*	Value is sensor dependant	Lower alarm level
	De-energized	Energizes on alarm
	Contact Normally Open (NO)	Closes on alarm
	Non-latching	
Alarm Relay 2*	Value is sensor dependant	Higher alarm level
	De-energized	Energizes on alarm
	Contact Normally Open (NO)	Closes on alarm
	Non-latching	
Fault Relay**	<1mA	Detector Fault
	Energized	De-energizes on alarm
	Contact Normally Open (NO)	Closes on alarm
	Non-latching	
Inhibit	2.0 mA (default) or 4.0 mA for Toxic and Flammable 2.0 mA (default) or 17.4 mA For Oxygen	Signal output inhibited during menu use. If any relay is set to inhibit relay, then inhibit relay will be activated.
Timeout	Disabled	No inhibit timeout. The detector waits for a button press before returning to the previous state/setting. Timeout period can be set in 'Configure Inhibit' menu in **Configuration Mode**.
Password	0000 (Disabled)	0000 (Password disabled). If changed then password is activated.
Location (Tag Number)	0000	Optional feature to identify the location or User's "Tag" number of the XCD
Temperature	°C	Option to have °C or °F
ModBus	ID, baud rates and Parity bit	ID : 1 Baud rates : 19,200 Parity bit : EVEN

* Alarm relays automatically reset when reading falls within alarm thresholds. If relay configured to LATCH, then relays must be reset using the Magnetic Wand.
** Fault state (fault relay and analogue output <1 mA) is always non-latching.

Table 3: Default configuration

Gas Name	Default Range	Lower Alarm	Lower Alarm Type	Higher Alarm	Higher Alarm Type
Oxygen	25.0%VOL	19.5%Vol	Falling	23.5%Vol	Rising
Hydrogen Sulfide	50.0ppm	10.0ppm	Rising	20.0ppm	Rising
Carbon Monoxide	300ppm	100ppm	Rising	200ppm	Rising
Hydrogen	1,000ppm	200ppm	Rising	400ppm	Rising
Nitrogen Dioxide	10.0ppm	5.0ppm	Rising	10.0ppm	Rising
Flammable IR	100%LEL	20%LEL	Rising	40%LEL	Rising
Flammable CAT	100%LEL	20%LEL	Rising	40%LEL	Rising
Carbon Dioxide IR	2.00%Vol	0.40%Vol	Rising	0.80%Vol	Rising

For details of how to change the configuration of the Sensepoint XCD please refer to section 13.

8 Normal Operation

Sensepoint XCD is supplied configured and ready for use according to the “Default Settings” table shown above. However these setting may be tailored to a specific application requirement using the Sensepoint XCD configuration menu system.

Access to the Sensepoint XCD transmitter’s configuration menus system is via the Magnetic Activation Tool.

8.1 Display Screen

The Sensepoint XCD display features an LCD with Numeric and bar-graph gas concentration data, alpha-numeric warning and status indication, a target for magnetic switch activation and the UP/DOWN/ESC/ENTER zones for remote configuration. The LCD is also backlit with hi-intensity multi-colour LED indicator to show NORMAL, ALARM and FAULT status.

During normal operation the instrument display shows a steady GREEN backlight.

During Low and High Gas Alarm it displays a flashing RED backlight

During Fault condition the instrument display shows a flashing YELLOW backlight.

The screen is visible through the window of the transmitter’s cover. The display shows the gas concentration (both graphically and numerically), range, units, alarm/
fault status, etc.

Note: The detector display may become sluggish in sub-zero temperatures and possibly unclear at temperatures below -40 °C, but the detector continues its gas monitoring function. The display is not damaged and recovers when the temperature increases.

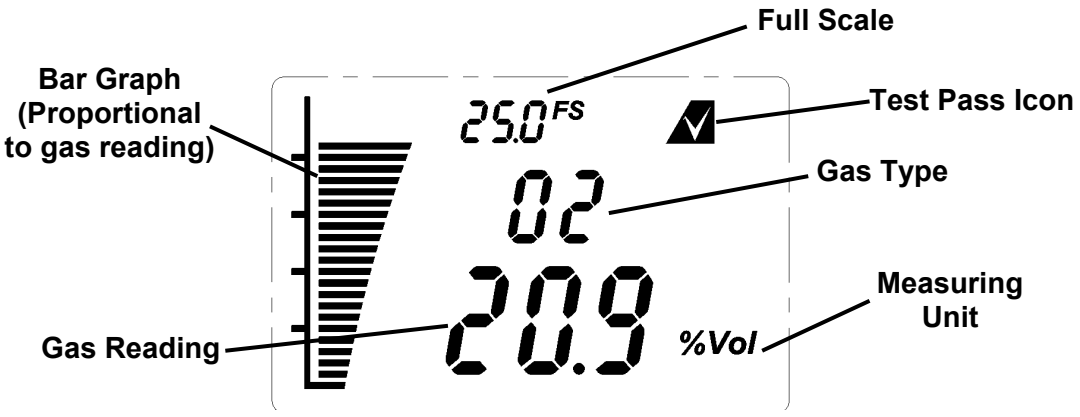

Diagram 11: Example of a O_2 Transmitter Display screen – Normal Operation

8.2 System Status

Display indications, current output and relay states for various operational conditions are shown in the following table. For further details of error messages and trouble shooting see section 12.3.

System Status						
Status	Display	Current Output	Relay			Back Light
			A1	A2	Fault	
Fault: Circuit or sensor error	F-XX fault number with fault icon blinking	0-1.0 mA			✓	Yellow, flashing
System Fault	N/A	0-0.15mA				
Note: In the event of processor failure the watchdog will automatically reset the system for recovery.						
Warning	W-XX warning number with fault icon blinking	Dependent on system status				Green Steady
Normal	0.0 Gas concentration	4-20 mA				Green Steady
Alarm 1	Gas concentration. 1st alarm icon blinking	4-20 mA	✓			Red, flashing
Alarm 2	Gas concentration. 2nd alarm icon blinking	4-20 mA	✓[1]	✓		Red, flashing
Over-range	Full scale icon and reading blinking	22mA	✓	✓[2]		Red, flashing
Inhibit	Inhibit icon dependent on Menu command. If any relay is set to inhibit relay, then inhibit relay will be activated.	2 or 4mA depending on configuration. Note: 2 or 17.4mA for Oxygen version				Green Steady

Table 4: System status

Note:
1. For Oxygen, A1 relay will not be activated because AL1 is configured to activate above 23.5 %Vol (in Rising Alarm configuration).

2. For Oxygen, A2 relay will not be activated because AL2 is configured to activate below 19.5 %Vol (in Falling Alarm configuration).

8.3 Magnetic Wand Activation

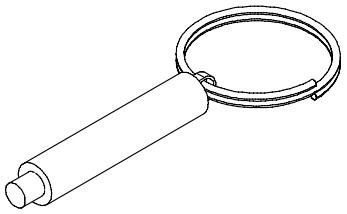

The magnetic wand is used as a tool to allow the user to communicate with the Sensepoint XCD transmitter. Communication with the XCD is achieved by positioning the Magnetic Wand at one of three different positions on the front glass window of the Sensepoint XCD transmitter. Activation of the switches is verified by observing the Magnetic Wand Activation Icon on the LCD display

Hold the Magnetic Wand in position for up to 2 seconds =

Hold the Magnetic Wand in position for 3 seconds or more =

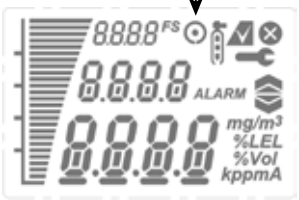

8.4 Mode Structure

Sensepoint XCD has 3 operating modes.

1. **Monitoring mode**, is the normal operating status while XCD measures and displays gas concentration. The fault/warning status is periodically checked, relay contacts are activated according to the configuration.

2. **Configuration mode**, this mode allows parameters relating to the configuration of the Transmitter functions to be changed according to specific needs. This mode can be protected by a password mechanism to prevent unauthorised changes being made.

3. **Review mode**, allows the user to view the current configuration settings.

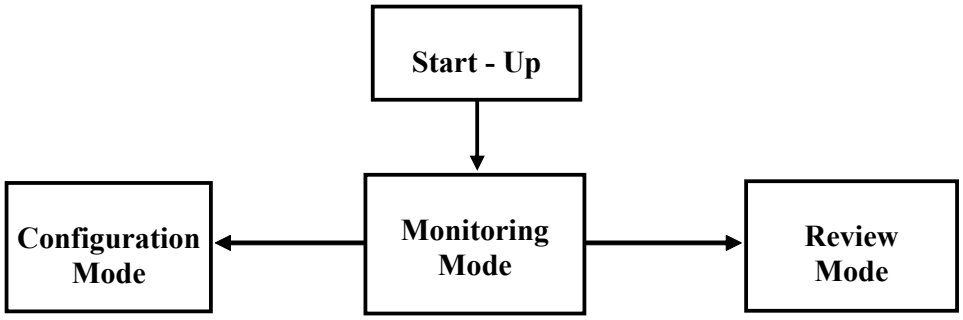

Diagram 12: Mode Structure

Further details of the information available and configuration options for the Sensepoint XCD can be found in Section 13. of this manual.

9 First time switch on (Commissioning)

WARNING

The following procedure requires the Transmitter Cover to be removed while carrying out supply voltage checks. Therefore the appropriate permits to work should be sought in preparation.

Prior to carrying out any HOT WORK ensure local and site procedures are followed. Ensure that the associated control panel output actuation is inhibited so as to prevent false alarms.

Caution: The following procedure should be followed carefully and only performed by suitably trained personnel

Note: Calibration is mandatory before the detector can be used for gas monitoring. Refer to Section 10.1 Calibration for the proper procedure.

1. Remove the transmitter housing cover and detach the display unit by lifting the semi-circular handle and pulling the assembly directly away from the termination module (without twisting it)
2. Configure the detector's analogue output signal configuration for Current SINK or Current SOURCE operation using the selector switch located on the back of the display module. The default setting is Current SOURCE.
3. Check that all electrical connections are terminated correctly as per section 6.
4. Switch On the external power supply to the transmitter at the safe area gas detection controller (or PLC).
5. Using a Digital Multi Meter (DMM), check the Supply Voltage at the terminals 1 (24V) and 2 (0V), this should be a minimum supply voltage of 12Vdc or 16Vdc depending on the transmitter version (Maximum supply voltage is 32V DC)
6. Switch Off the external power to the detector.
7. Refit the Display Module and Cover.

Note: Ensure that none of the wires in the terminal area cause an obstruction when refitting the Display Module. Ensure that the socket on the Display Module is fully engaged in the Display Module Connector on the Terminal Module.

8. Switch On external power to the detector.
9. All the display icons/text/numbers are displayed for 3 seconds.

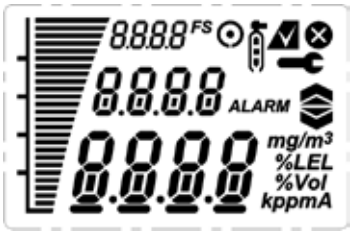

10. A start up sequence will then be displayed, similar to the one shown in Diagram 15.

Note:
For a full description of each screen shown in Diagram 15., please refer to Section 13.3 “Review Mode” of this Manual.

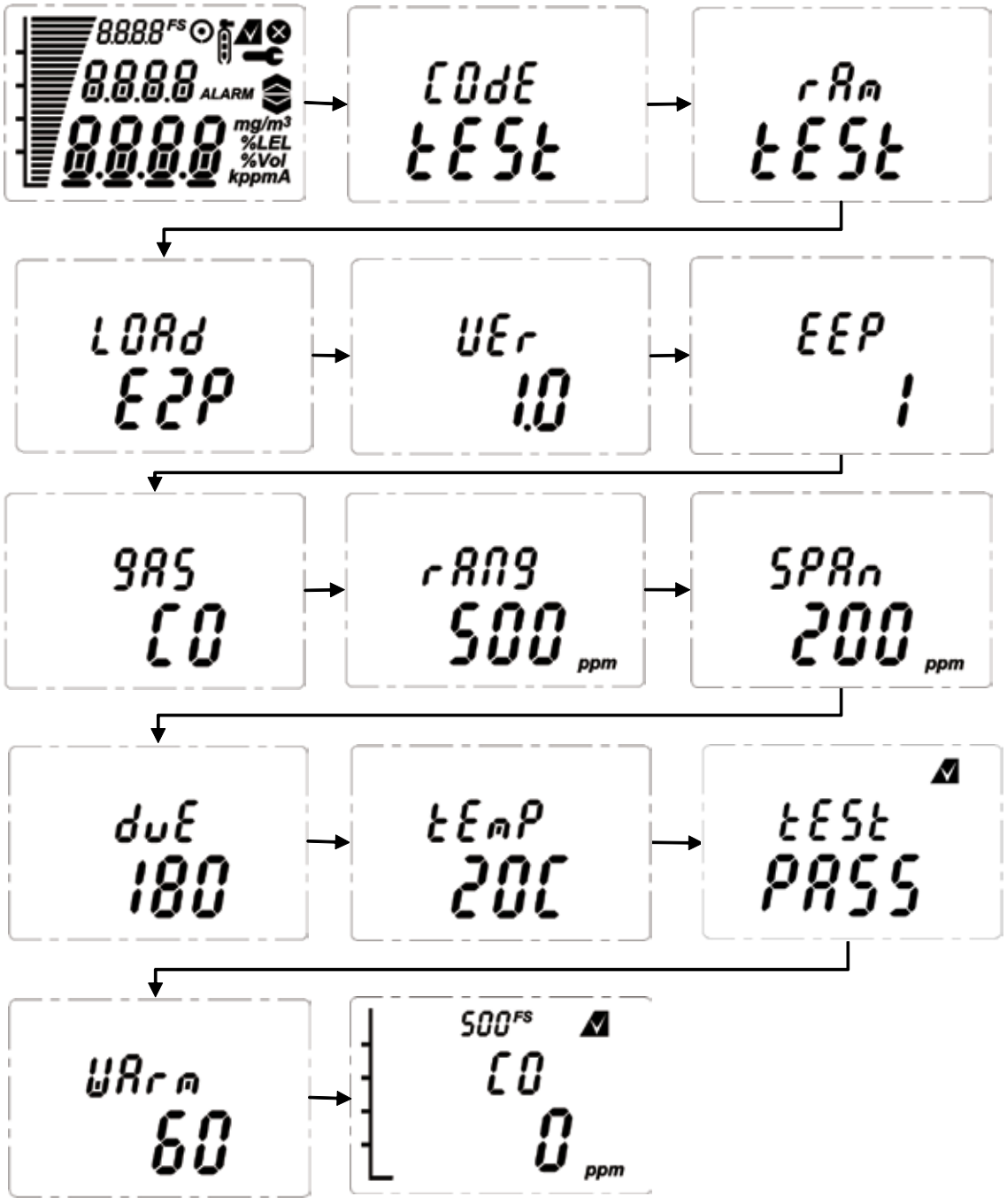

Diagram 15: Normal Start up procedure (For the CO sensor version)

11. The warm up countdown of 60 seconds (depending on the gas type) is then displayed.

12. Normal **Monitoring Mode** is then resumed.

10 Response Check and Calibration

It is recommended to periodically carry out a gas response check on the Sensepoint XCD to ensure correct operation. This may be done in two ways;

1. A simple Response Check often referred to as a “BUMP TEST” is a test using calibration gas applied to the sensor via the nozzle of the Weather Protection or using the Sensepoint XCD Gassing Cap.
If a BUMP TEST is done via the Weather Protection nozzle it may be necessary in windy conditions to increase the flow rate of the test gas by a further 1 LPM, OR, to shelter the weather protection from the wind.

2. A full gas calibration of the sensor as described in the following section, using ONLY the Sensepoint XCD Gassing Cap (Part No.: S3KCAL).

10.1 Zeroing and span calibration

WARNING

As some calibration gases may be hazardous, ensure that outlets from gassing accessories exhaust safely.

Caution: Before initial calibration allow the detector to stabilize for 30 minutes after applying power. When in zeroing and span calibration mode the current output from the detector is inhibited (default 2mA) to avoid false alarms. For Flammable gas calibration use a calibration gas concentration of between 25%LEL and 75%LEL to ensure that the required accuracy can be attained. For Hydrogen Sulfide type sensors refer to section 10.1.2 before conducting zero and span calibration. For toxic sensors use a calibration gas of approximately 50%FSD.

To calibrate the detector, use an appropriate span gas cylinder, constant flow regulator AND the Sensepoint XCD Gassing Cap (see section 4.7). The flow rates used for calibration gas are as follows:

Gas Type	Flow rate (L / Min)
Air or N_2 for Zero	0.5 to 1.0
Flammable CAT	1 to 1.5
O_2	0.5 to 1.0
H_2S	0.5 to 1.0
CO	0.5 to 1.0
H_2	0.5 to 1.0
NO_2	0.5 to 1.0
Flammable IR	0.4 to 0.6
CO_2 IR	0.4 to 0.6

A compressed air cylinder (20.9%Vol oxygen) should be used to perform the zero calibration if the area where the detector is located contains any residual amount of the target gas. If no residual gas is present then the background air can be used to perform the zero calibration. Contact your Honeywell Analytics representative for details of suitable calibration kits.

To calibrate the detector follow the procedure below.

Note: the Oxygen sensor does not require a zeroing procedure. Background air (20.9%Vol oxygen) can be used to span the oxygen sensor in place of a compressed air cylinder (20.9%Vol oxygen). For oxygen sensors only do parts 1-4, 12, 13 (if compressed air cylinder is used), 14-17 and 22 of the procedure below.

(ZERO CALIBRATION)

WARNING

When calibrating the Flammable IR or CO_2 IR sensors, it is essential that the zero calibration is always followed by a span calibration. The zero calibration must never be done alone.

1. If the ambient air is NOT considered reliable to use to set the ZERO, then remove the weather protection and fit the Gassing Cap accessory (see Section 4.3) onto the sensor and apply a clean source of zero gas or compressed air.
2. To access the calibration menu, hold the end of the magnet over the switch located at the top center of the detector display (✓) for at least 3 seconds and then remove.
3. The display will indicate the first configuration mode menu ‘SEt CAL’.

4. Put the magnet over the ‘✓’ switch again and move to enter the Calibration menu.
5. The display will show the current gas reading, and the ‘ ’ icon flashes.

6. When the zero gas reading is stable use ‘✓’ to confirm zero calibration.
7. If successful the display shows ‘ZEro PASS’ (if not successful, the display shows ‘ZEro FAIL’ and returns to configuration mode).

8. If using zero-air, turn it off. Zeroing is complete and saved.
9. The display shows ‘SPAn’ with ‘YES’ flashing.

10. If span calibration is required use '✓' proceed to the next step. If span calibration is not required, use '▲▼' to select 'No' and '✓' to return to configuration mode.

WARNING

When calibrating the Flammable IR or CO_2 IR sensors, it is essential that the span calibration is done after a zero calibration.

(SPAN CALIBRATION)

11. The display shows the current calibration span gas concentration while flashing the '▮' icon. Use '▲▼' to change the calibration span gas concentration, and '✓' when required span calibration level is set.

12. The display will show the current gas reading, and the '▮' icon flashes.

13. Connect the regulator to the span gas cylinder.

14. Apply the span gas to the sensor using the Sensepoint XCD Gassing Cap (see section 4.7 for description). The live gas reading is displayed. When the reading is stable, use '✓' to confirm span calibration.

15. If the sensor has been replaced the following display may be shown.

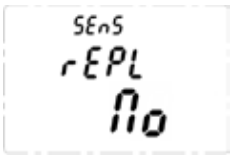

16. Use '▲▼' to select 'YES' if the sensor has been replaced or 'No' if it has not been replaced.

17. If the span calibration is successful the instrument will briefly display 'SPAn PASS' (if fails 'SPAN FAIL' displayed and returns to configuration mode).

Note: the calibration due warning counter is reset after a successful calibration.
See section 12.3 for further details of setting a calibration due warning.

18. The display alternates between “Purg gAS” and the gas reading to indicate that the unit is expecting the span gas to be removed from the sensor.

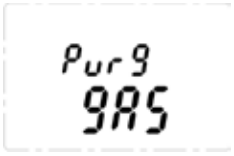

19. Promptly switch off the calibration span gas and remove the Sensepoint XCD Gassing Cap from the sensor to allow the gas to disperse.

20. When the reading falls below 50% of the calibration gas level the display indicates a countdown (up to 180 seconds dependant on gas type).

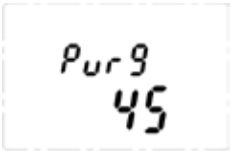

21. When the countdown is finished, the calibration procedure is complete.

22. The instrument returns to the ‘Set CAL’ menu. Activate the ‘▲’ or ‘▼’ switch to select another menu or select ‘QuIT’ to return to normal monitoring mode.

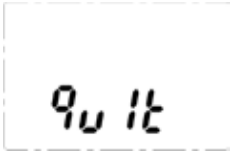

Note: Remember to always replace the Weather Protection and other accessories.

10.2 Zeroing and span calibration of Hydrogen Sulfide sensors

Hydrogen Sulphide sensors can be affected by extreme humidity changes. A sudden increase in ambient humidity can result in a short-term positive drift in the instrument's reading. A sudden decrease in ambient humidity can result in a short-term negative drift in the instrument's reading. These are most likely to be noticed during calibration with dry or cylinder gas.

When calibrating Hydrogen Sulphide cartridges the following should be taken into account while following the procedure in 10.1:

1. To zero the sensor, use a compressed air cylinder of 20.9%Vol oxygen (not Nitrogen). Do not use background air.

2. Apply the gas to the sensor for three minutes before using '✓' to confirm the zero calibration.

3. If a span calibration is to be performed, the span calibration gas should be applied to the sensor immediately after the zeroing procedure. Do not allow the sensor to return to ambient air conditions between steps 2 and 3.

4. Apply the span gas for two minutes before using '✓' to confirm the span calibration.

11 General Maintenance

WARNINGS

Access to the interior of the transmitter, when carrying out any work, must only be conducted by trained personnel.

Care should be taken when removing and refitting the Sensepoint XCD plug-in Sensor Cartridge to the Sensor Socket so that damage to the connection pins can be avoided.

Before carrying out any work ensure local regulations and site procedures are followed. Appropriate standards must be followed to maintain the overall certification of the sensor and transmitter.

To reduce the risk of ignition of hazardous atmosphere, de-classify the area or disconnect the equipment from the supply circuit before opening the transmitter enclosure. Keep assembly tightly closed during operation.

Never attempt to open a junction box/enclosure or replace/refit the sensor in potentially hazardous atmospheres.

Take care when handling sensors as they may contain corrosive solutions.
Do not tamper with or in any way disassemble the sensor.
Do not expose to temperatures outside the recommended ranges.
Do not expose sensors under storage conditions to organic solvents or flammable liquids.

At the end of their working life, replacement electrochemical sensors for oxygen and toxic gas must be disposed of in an environmentally safe manner. Disposal should be according to local waste management requirements and environmental legislation.
Alternatively, old replaceable sensors may be securely packaged and returned to Honeywell Analytics clearly marked for environmental disposal.

Electrochemical sensors should NOT be incinerated as this action may cause the cell to emit toxic fumes.

Honeywell Analytics recommends that gas detectors are tested and re-calibrated on a six-monthly basis, or according to site practice. For remote Flammable or Toxic sensors used with the XCD Transmitter, please refer to the individual sensor manuals for specific recommended calibration periods. If a toxic sensor is exposed to a gas concentration significantly above the measuring range it shall be calibrated as soon as possible afterwards.

11.1 Operational Life

The pellistors used in the Catalytic flammable gas sensor can suffer from a loss of sensitivity when in the presence of poisons or inhibitors, e.g. silicones, sulphides, chlorine, lead or halogenated hydrocarbons. The pellistors are poison resistant to maximize the operational life of the Catalytic flammable sensor. A typical operating life, subject to the presence of poisons/inhibitors is 36 months.

The NDIR (infrared) flammable gas sensor is not affected by the above-mentioned poisons and therefore has a longer life span. A typical operating life is 5 years.

Typical life of a toxic gas sensor is dependant on the application, frequency and amount of gas exposure. Under normal conditions (3 monthly visual inspection and 6 monthly test/re-calibration), the XCD Oxygen and other toxic sensors have an expected life equal to or greater than 24 months.

Refer to section 12 for sensor replacement procedures.

Caution: Oxygen deficient atmospheres (less than 6%V/V) may result in inaccuracy of reading and performance.

12 Servicing

WARNINGS

Take care when handling sensors as they may contain corrosive solutions. Do not tamper or in any way dis-assemble the sensor. Do not expose to temperatures outside the recommended range. Do not expose sensor to organic solvents or flammable liquids.

Care should be taken when removing and refitting the Sensepoint XCD plug-in Sensor Cartridge to the Sensor Socket so that damage to the connection pins can be avoided.

At the end of their working life, replacement electrochemical sensors for oxygen and toxic gas must be disposed of in an environmentally safe manner. Disposal should be according to local waste management requirements and environmental legislation.
Alternatively, old replaceable sensors may be securely packaged and returned to Honeywell Analytics clearly marked for environmental disposal.

Electrochemical sensors should NOT be incinerated as this action may cause the cell to emit toxic fumes.

Caution: The following procedure should be followed carefully and only performed by suitably trained personnel.
A fault condition will be signalled by the detector if the sensor is removed with the unit under power.

12.1 Sensor replacement

The Flammable Catalytic and Toxic ECC sensor cartridge that are used with the Sensepoint XCD Sensor Socket have no serviceable parts. When they have reached the end of their operational life, simply replace the cells.

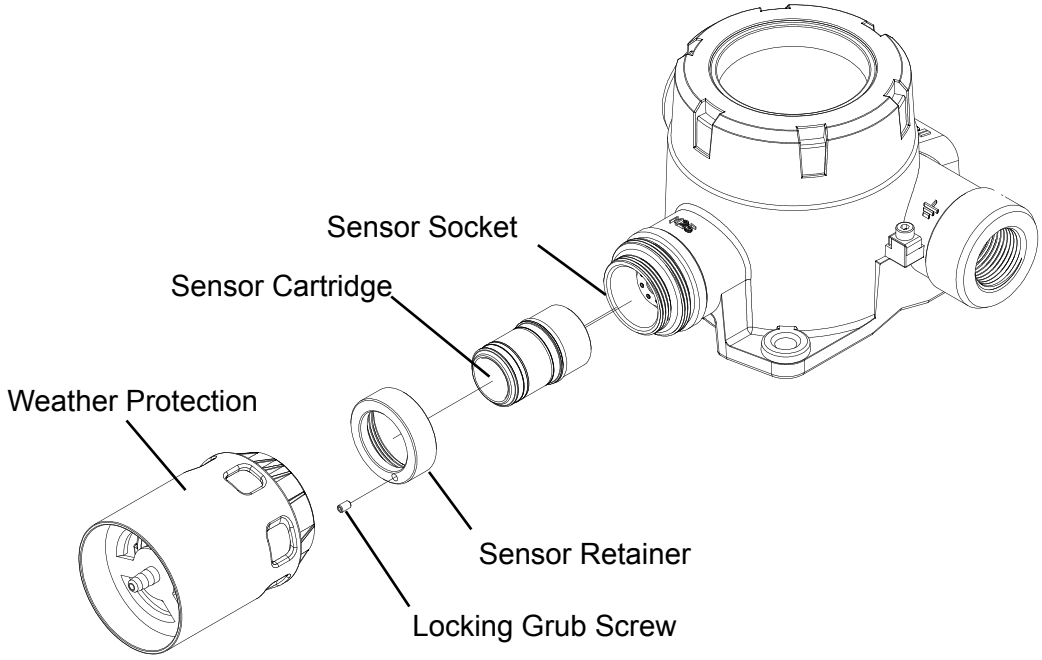

Diagram 13: Sensor Replacement

To replace the plug-in sensor of a Sensepoint XCD Sensor Socket use the following procedure:

1. **Important:** Remove the Power from the Sensepoint XCD Transmitter
2. Remove the Weather Protection or other accessories from the sensor socket thread.
3. Loosen the Locking Grub Screw and unscrew the Sensor Retainer
4. Carefully pull the old Sensor from the sensor socket without twisting.
5. Fit the new Sensor in its place
6. Calibrate sensor

WARNING

Ensure that the same Gas Type and Range of Sensor is fitted in place of the old Sensor.

Care should be taken when removing and refitting the Sensepoint XCD plug-in Sensor Cartridge to the Sensor Socket so that damage to the connection pins can be avoided.

The sensor head must be fitted with the supplied weather protection, and mounted so that the sinter is pointing downward to provide ingress protection IPX6.

The weather protection is a potential electrostatic charging hazard. The manufacturer's instructions should be observed.

12.2 Replacing Modules within the Transmitter

Two replaceable module assemblies are located within the transmitter housing. The Display Module and the Terminal Module.

The Display Module is simply removed by unplugging it from the Terminal Module (this procedure is done during normal installation).

To replace the Terminal Module, use the following procedure:

1. Unscrew and remove the Transmitter Cover

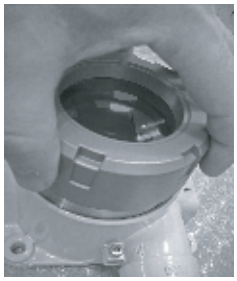

2. Lift the handle and un-plug and remove the Display Module.

3. Unplug the connection terminals and lift them clear of the Terminal Module.

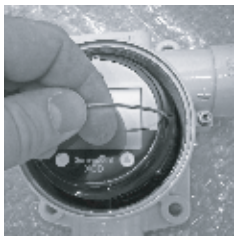

4. Unplug the connector for the XCD sensor.

5. Loosen and remove the three “cross-headed” screws that secure the Terminal Module to the Transmitter housing.

6. Carefully lift the Terminal Module from the transmitter housing.

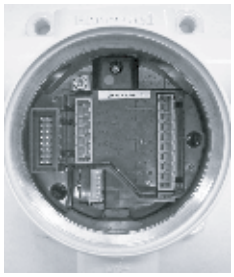

7. Fit the new Terminal Module using the above procedure in reverse order.

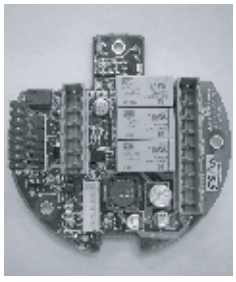

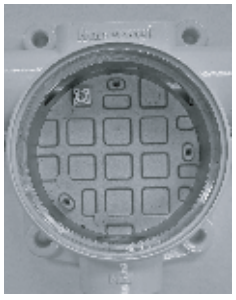

12.3 Faults and Warnings

The table below provides details of possible error.

Message	Description	Action
W-01	Calibration needed	The unit has not been calibrated for the configured calibration interval Calibration is necessary due to change of sensor/gas type
W-02	Transmitter Temperature limits exceeded	Use '✓' to clear when within limits
W-03	Alarm setting needs to be configured	Re-configure alarm settings such that upper alarm should not exceed user configured scale
W-04*	Over-range warning	Use '✓' to clear when within limits
W-05*	The sensor is switched off to prevent it from being deteriorated	Make sure that there is no flammable gas in the air and use '✓' to clear when within limits
F-01	Internal I2C failure	Cycle power to detector. Replace detector
F-02	Cell failure	For Toxic, replace sensor For Flammable/IR, cycle power to detector. Replace sensor
F-03	Significant zero drift	Re zero/calibrate
F-04	Unexpected sensor fitted	Replace sensor
F-05	EEPROM is corrupted	Reset transmitter. If fault still appear, replace transmitter
F-06	Low supply voltage	Reset transmitter. If fault still appear, replace transmitter
F-07	SRS processor failure	Reset transmitter. If fault still appear, replace transmitter
F-08	RAM read/write fault	Reset transmitter. If fault still appear, replace transmitter
F-09	Info. memory corrupted	Reset transmitter. If fault still appear, replace transmitter
F-10	Code Memory corrupted	Reset transmitter. If fault still appear, replace transmitter
F-11	DAC output failure	Check load resistor or sink/source mode switch was configured properly
F-12	Heater failure	Reset transmitter. If fault still appear, replace transmitter
F-13	Supplied voltage failure	Check supply voltage. Replace detector

*Note : W-04 and W-05 are only for flammable catalytic bead sensors. For other gases, gas reading will blink on the LCD instead of the over-range warning.

Table 5: Fault and Warning List

13 Menu's and Advanced Configuration

13.1 Abort Function

In Review Mode or Configuration Mode the user can escape one step back from the current position using the Abort Function. To do this the user must activate the Enter switch for more than 3 seconds with the Magnetic Wand. Switching between each pair of modes or between menus and sub menus are shown in the following table.

From	To	Example
Review Mode	Monitoring Mode	Activate Enter switch for more than 3 seconds while in Review Mode
Configuration Mode	Monitoring Mode	Activate Enter switch for more than 3 seconds while navigating menus in the Configuration Mode
Configuration Mode sub menu	Configuration Mode main menu	Activate Enter switch for more than 3 seconds while in a sub menu

Table 6: Transmitter menu switching

13.2 Configuration Mode

The table below shows the functions available via the configuration menu that can be displayed on the transmitter and accessed using the Magnetic Wand.

The instrument will show the main Menu when the "Enter" switch is activated with the Magnetic Wand and held for at least 3 seconds.

The Menu is password protected to prevent any unauthorized changes. The password is initially disabled and the default password is '0000'. If the default password is changed to other than '0000', then the password is enabled automatically and requested when entering Configuration Mode.

With the Menu showing, the following functions can be performed: calibration, bump test, sensor selection and configuration of parameters such as measuring range, calibration gas level, calibration interval, inhibit current, inhibit timeout, alarm setting, relay setting, password change, location setting, temperature unit reading, force analogue output and alarm function checks.

While in Configuration mode, the output current of the transmitter is inhibited to prevent false alarms.

Names, displays and descriptions for each menu item in Configuration Mode are shown in the following table.

Menu	Display	Description
Set Calibration		Execute zero/span calibration Set calibration gas level After zero, the option exists to proceed with span calibration, or return to the Menu.
Select Sensor	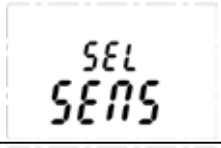	Select the type of sensor from the sensor list. This menu is only available for flammable / IR sensor.
Select Gas	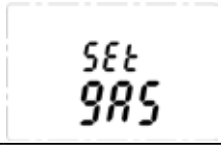	Select the type of gas from the list. This menu is only available for flammable / IR sensor.
Set Range	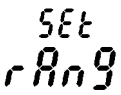	Set measuring range
Configure Inhibit *Note 1*	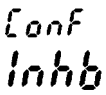	Select inhibit current Set timeout option (5 minute increments)
Set Password		Enable/disable password Set password Default – no password (Select ‘0000’)
Set Calibration Interval		Set calibration interval, 30 to 365 days User configurable option to display warning
Bump Test		Execute a ‘bump’ test to check gas response of the sensor.
Force Current	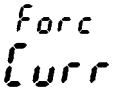	Force analogue output to test functionality of GD control system during system commissioning.
Set Alarms *Note 2*	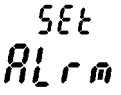	Set alarm 1, alarm 2 levels, functionality and operation (none/falling/rising)
Set Relays *Note 2*		Set relay 1,2,3 type (alarm 1, alarm 2, fault and inhibit) and action (energized/de-energized)
Relay Operation *Note 2*		Configure relay on delay time, relay off delay time and latch/non-latch

Set Location	SEt Loc	Set location (or TAG number)
Set Temperature Unit	tEmP Un It	Change temperature display unit. °C (Celcius) or °F (Fahrenheit)
Check Alarm functions	tESt ALrm	Simulate alarm situation to check the alarm system without gas present at the sensor
Quit	9u It	Return to Monitoring mode

Table 7: Transmitter menu descriptions

Note 1: To comply with IEC EN 60079-29-1 and EN 50104, if the Inhibit current is set to 4 mA, the timeout option must be set. The maximum value for the timeout is 15 minutes.

Note 2: To comply with IEC EN 60079-29-1 and EN50104, the alarms must be configured as latching by setting the corresponding relay to latching, even if the relay is not being used. If relays are used the action must be configured as "energized" for fail safe operation.

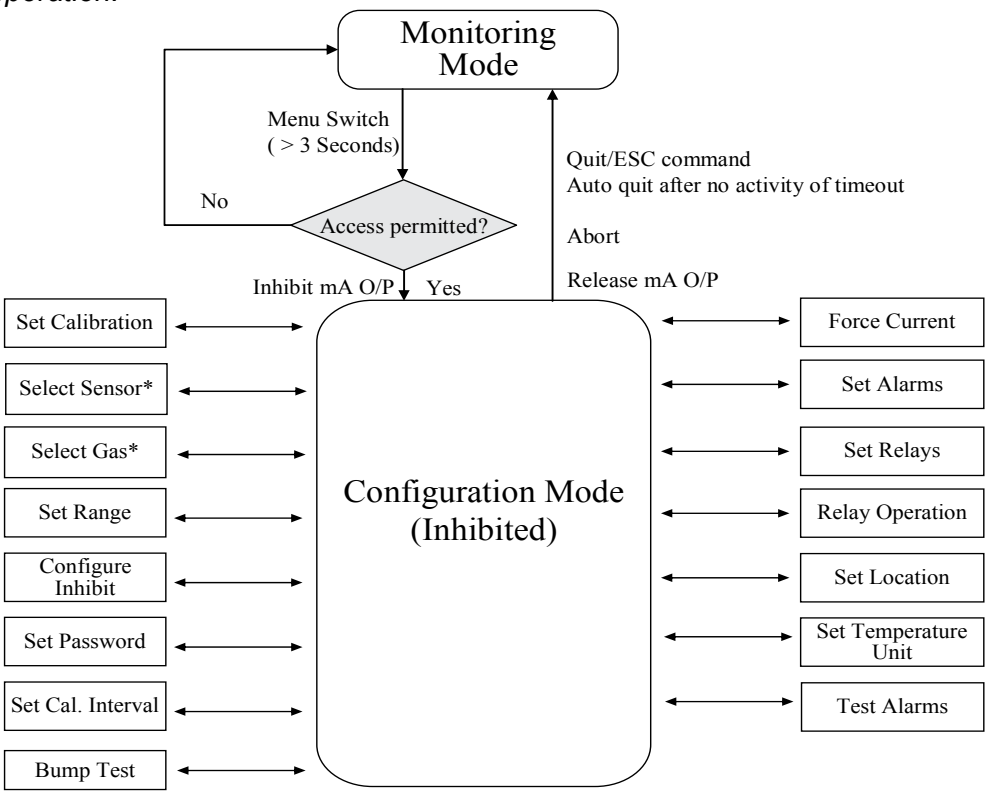

** Note : "Select Sensor" and "Select Gas" menus are only available for flammable/IR sensors.*

Diagram 14: Configuration Mode

13.2.1 Configuration mode operation table

Configuration mode allows the user to perform calibration and configure parameters such as full scale range, calibration gas level, calibration interval, inhibit current & timeout, alarm settings, relay settings, set a password, etc. To activate Configuration mode hold the magnet over the ENTER switch for at least 3 seconds and then remove. Configuration mode can be password protected to prevent unauthorized personnel from changing parameters. Initially the password is set to '0000' meaning it is disabled. While in Configuration mode, the output current of the detector is inhibited to prevent false alarms.
Use the table below to help navigate the menus and make configuration changes. The menus are shown in the left hand column. Use ▲▼ to select the required menu and '✓' to enter. Follow the information and instructions in the table from left to right from the required menu.

▲▼	OK	▲▼	OK	▲▼	OK	▲▼	OK	▲▼
SEt CAL[1]	✓	GAS NAME, ZERO CONCENTRATION AND FLASHING ' ' ICON DISPLAYED. APPLY ZERO GAS AND USE '✓' WHEN READING IS STABLE. 'ZEro PASS' DISPLAYED IF OK, 'ZEro FAIL' IF NOT.	⇨	'SPAN' DISPLAYED AND 'YES' FLASHING TO ASK IF YOU NOW WANT TO PERFORM SPAN CALIBRATION. USE '✓' TO PROCEED OR USE ▲▼ TO SELECT 'No' AND RETURN TO MENU MODE.	✓	'GAS' TARGET CONCENTRATION FLASHING AND 'T' ICON DISPLAYED. USE ▲▼ TO CHANGE GAS CONCENTRATION AND '✓' TO START SPAN CALIBRATION.	✓	GAS NAME, CURRENT CONCENTRATION AND FLASHING 'T' ICON DISPLAYED. APPLY SPAN GAS AND USE '✓' WHEN READING STABLE. IF OK 'PASS' & 'PurG' DISPLAYED (IF FAIL 'SPAN FAIL' DISPLAYED AND RETURNS TO MENU). REMOVE SPAN GAS. WHEN READING <50% OF SPAN POINT, COUNTDOWN BEGINS & UNIT RETURNS TO MENU MODE.
SEL SENS[2]	✓	'SEnS' DISPLAYED WITH SENSOR TYPE DISPLAYED. USE ▲▼ TO SELECT DIFFERENT SESNOR.	✓	IF SENSOR TYPE IS CHANGED, 'CAL YES' DISPLAYED TO ASK IF YOU NOW WANT TO PERFORM CALIBRATION. USE '✓' TO PROCEED OR USE ▲▼ TO SELECT 'No' AND RETURN TO MENU MODE.	✓			
SEL 9AS[2]	✓	'9AS' DISPLAYED WITH GAS TYPE DISPLAYED. USE ▲▼ TO SELECT DIFFERENT GAS.	✓	IF GAS TYPE IS CHANGED, 'CAL YES' DISPLAYED TO ASK IF YOU NOW WANT TO PERFORM CALIBRATION. USE ' ✓ ' TO PROCEED OR USE ▲▼ TO SELECT 'No' AND RETURN TO MENU MODE.	✓			
SEt rAn9	✓	BAR GRAPH INDICATING CURRENT RANGE, 'rAn9' DISPLAYED & CURRENT RANGE FLASHES. USE ▲▼ TO SELECT DIFFERENT RANGE	✓	IF RANGE IS CHANGED, 'CAL' DISPLAYED AND 'YES' FLASHING TO ASK IF YOU NOW WANT TO PERFORM CALIBRATION. USE '✓' TO PROCEED OR USE ▲▼ TO SELECT 'No'.	✓	IF RANGE IS CHANGED, 'ALrm' DISPLAYED AND 'YES' FLASHING TO ASK IF YOU NOW WANT TO MODIFY ALARM SETTINGS. USE '✓' TO PROCEED OR USE ▲▼ TO SELECT 'No' AND RETURN TO MENU MODE.	✓	UNIT RETURNS TO MENU MODE
ConF Inhb[4]	✓	'Inhb' DISPLAYED WITH '⏲' ICON FLASHING. CURRENT INHIBIT mA VALUE FLASHES. USE ▲▼ TO SELECT NEW VALUE (2 OR 4mA TOXICS, OR 2 OR 17.4mA OXYGEN VERSION).	✓	'tImE' DISPLAYED WITH '⏲' ICON. FLASHING CURRENT INHIBIT TIMEOUT PERIOD (MINUTES) FLASHES. USE ▲▼ TO SET NEW TIMEOUT. (IF SET TO 0 OUTPUT IS PERMANENTLY INHIBITED)	✓	UNIT RETURNS TO MENU MODE		
SEt PASS	✓	'PASS' DISPLAYED WITH FIRST DIGIT PLACE ICON OF THE PASSCODE FLASHING. USE ▲ TO SELECT 1ST DIGIT OF CURRENT PASSWORD. USE ▼ TO MOVE TO NEXT DIGIT AND SET REST OF PASSCODE.	✓	UNIT RETURNS TO MENU MODE				

Forc Curr	✓	'Forc' DISPLAYED WITH '⇨' ICON. DEFAULT FORCE CURRENT '4.00' FLASHES. USE ▲▼ TO CHANGE TO REQUIRED mA LEVEL.	✓	UNIT TRANSMITS THE CURRENT IF YOU WANT TO EXIT FROM THIS MENU, USE ABORT FUNCTION				
CAL Int3[3]	✓	'Int' DISPLAYED WITH CURRENT CALIBRATION INTERVAL FLASHING. USE ▲▼ TO CHANGE INTERVAL.	✓	'duE' DISPLAYED AND 'No', 'LCd' OR 'ALL' FLASHING. USE ▲▼ TO SELECT REQUIRED CAL DUE WARNING OUTPUT.	✓	UNIT RETURNS TO MENU MODE		
bumP tESt	✓	PEAK READING DISPLAYED WITH OUTPUT INHIBITED '⇨' ICON AND PEAK STRING FLASHING. APPLY BUMP TEST GAS AND CHECK PEAK READING ON DISPLAY.	✓	CURRENT GAS CONCENTRATION DISPLAYED WITH OUTPUT INHIBITED '⇨' ICON FLASHING.	✓	UNIT RETURNS TO MENU MODE WARNING: DO NOT RETURN TO NORMAL MODE UNTIL CURRENT GAS CONCENTRATION HAS FALLEN BELOW A1 LIMIT OR THE DETECTOR WILL GIVE AN ALARM		
SEt ALrm	✓	'AL1', ICON DISPLAYED AND CURRENT ALARM LEVEL 1 CONCENTRATION FLASHES. USE ▲▼ TO CHANGE TO REQUIRED CONCENTRATION LEVEL.	✓	'AL1' DISPLAYED WITH 'NonE', 'rISE' OR 'FALL' FLASHING. USE ▲▼ TO SELECT REQUIRED ALARM ACTION.	✓	'AL2', ICON DISPLAYED AND CURRENT ALARM LEVEL 2 CONCENTRATION FLASHES. USE ▲▼ TO CHANGE TO REQUIRED CONCENTRATION LEVEL.	✓	'AL2' DISPLAYED WITH 'NonE', 'rISE' OR 'FALL' FLASHING. USE ▲▼ TO SELECT REQUIRED ALARM ACTION AND USE '✓' TO RETURN TO MENU MODE.
Set rLY[5]	✓	'rL1' DISPLAYED AND 'AL1', 'AL2', 'Inht' or 'FLt' FLASHES. USE ▲▼ TO CHANGE TO REQUIRED RELAY TARGET.	✓	'rL1' DISPLAYED AND 'dEEn' or 'Enr9' FLASHES. USE ▲▼ TO CHANGE TO REQUIRED RELAY ACTION.	✓	'Rl2' DISPLAYED AND 'AL1', 'AL2', 'Inht' or 'FLt' FLASHES. USE ▲▼ TO CHANGE TO REQUIRED RELAY TARGET.	✓	'rL2' DISPLAYED AND 'dEEn' or 'Enr9' FLASHES. USE ▲▼ TO CHANGE TO REQUIRED RELAY ACTION.
	✓	'rL3' DISPLAYED AND 'AL1', 'AL2', 'Inht' or 'FLt' FLASHES. USE ▲▼ TO CHANGE TO REQUIRED RELAY TARGET.	✓	'rL3' DISPLAYED AND 'dEEn' or 'Enr9' FLASHES. USE ▲▼ TO CHANGE TO REQUIRED RELAY ACTION.	✓	UNIT RETURNS TO MENU MODE		
rlY OPr[5]	✓	'rLY', 'ON' DISPLAYED AND CURRENT RELAY-ON TIME FLASHES. USE ▲▼ TO CHANGE TO REQUIRED RELAY-ON DELAY.	✓	'rLY', 'OFF' DISPLAYED AND CURRENT RELAY-OFF TIME FLASHES. USE ▲▼ TO CHANGE TO REQUIRED RELAY-OFF DELAY.	✓	'Ltch' DISPLAYED AND 'YES' or 'No' FLASHES. USE ▲▼ TO CHANGE TO REQUIRED LATCH OPTION.	✓	UNIT RETURNS TO MENU MODE
Set Loc	✓	'Loc' DISPLAYED WITH FIRST 4 CHARACTERS OF THE LOCATION STRING. USE ▼ TO CHANGE THE 1ST CHARACTER OF CURRENT LOCATION STRING. USE ▲ TO MOVE TO NEXT CHARACTER AND SET REST OF STRING. MAXIMUM 12 CHARACTERS CAN BE SET.	✓	'Loc' DISPLAYED NEW LOCATION STRING. THE STRING MOVES RIGHT-TO-LEFT TO SHOW WHOLE CHARACTERS TWICE. THEN UNIT AUTOMATICALLY RETURNS TO MENU MODE.				
tEmP UnIt	✓	'tEmP' DISPLAYED WITH '°C' OR '°F' FLASHING. USE ▲▼ TO CHANGE TO REQUIRED TEMPERATURE UNIT.	✓	UNIT RETURNS TO MENU MODE				
tESt ALrm	✓	'Forc' DISPLAYED and 'AL1' FLASHING TO SELECT TEST-REQURED ALARM. USE '✓' TO FORCE ALARM1.	✓	GAS NAME, CURRENT GAS CONCENTRATION DISPLAYED AND '⇨' ICON AND AL ICON FLASHE.	✓	UNIT RETURNS TO MENU MODE		
9ult	✓	QUITS MENU MODE AND RETURNS TO MONITORING MODE						
▲▼	**OK**	**▲▼**	**OK**	**▲▼**	**OK**	**▲▼**	**OK**	**▲▼**

[1] Refer to section 10.1 for detailed zero and span calibration procedures. A detector fitted with an oxygen sensor will skip the zeroing procedure. Re-calibrate the detector if left un-powered for periods in excess of 24 hours.
[2] This menu is only available and visible when the unit is fitted with flammable/IR sensor.
[3] The calibration due warning counter is automatically reset after a successful calibration.
[4] To comply with IEC EN 60079-29-1 and EN 50104, if the Inhibit current is set to 4 mA, the timeout option must be set. The maximum value for the timeout is 15 minutes.
[5] To comply with IEC EN 60079-29-1 and EN50104, the alarms must be configured as latching by setting the corresponding relay to latching, even if the relay is not being used. If relays are used the action must be configured as "energized" for fail safe operation.

13.3 Sensor / Gas Selection

NOTE:
This Configuration option is not available for XCD units with EC sensors

13.3.1 Sensor Selection

"Select Sensor" sets the identity of the type of mV sensor attached to the XCD when XCD does not detect the sensor type automatically. when sensor type is detected by XCD automatically, the current sensor type can be confirmed in this menu.

The available mV sensors:

Ir-1	NDIR Infrared CO_2 0-2%Vol
Ir-3	NDIR Infrared Methane 0-100%LEL
Ir-4	NDIR Infrared Propane 0-100%LEL
Cb-1	Catalytic 0-100%LEL

13.3.2 Gas Selection

Use "SEL gAS" to set the target gas for sensors capable of detecting multiple gases. The available gases:

Sensor type	Gas type	Gas Name displayed
Ir-1	CO_2	CO_2
Ir-3	mEt	mEt
Ir-4	Propane	PrO
Cb-1	Str1 to Str8	FLM

Gas selection is dependent on the type of sensor attached to the XCD. If Ir-1/Ir-3/Ir-4 sensor is attached, then gas type is detected by XCD automatically like CO_2/mEt/ProP gas.. But when Cb-1 sensor is attached to the XCD, a user can select the gas from Str1 (1*) to Str8 (8*). For more information on star rating, please refer to section 19.2.

Note: For standard calibration (calibration gas = target gas) the following parameters are to be used:

Methane	*Star Rating 6* Gas Str 6*	*100 %LEL = 4.4 %v/v*
Propane	*Star Rating 5* Gas Str 5*	*100 %LEL = 1.7 %v/v*

The current configuration of the XCD is displayed and by using the '✓' switch to enter "SEL gAS" menu. To select a flammable gas, use '▲▼' to move through the list, then use '✓' to make the selection or abort function to discard the selection and return to menu mode.
If type of gas is changed, calibration prompt will appear to ask if you want to perform calibration.

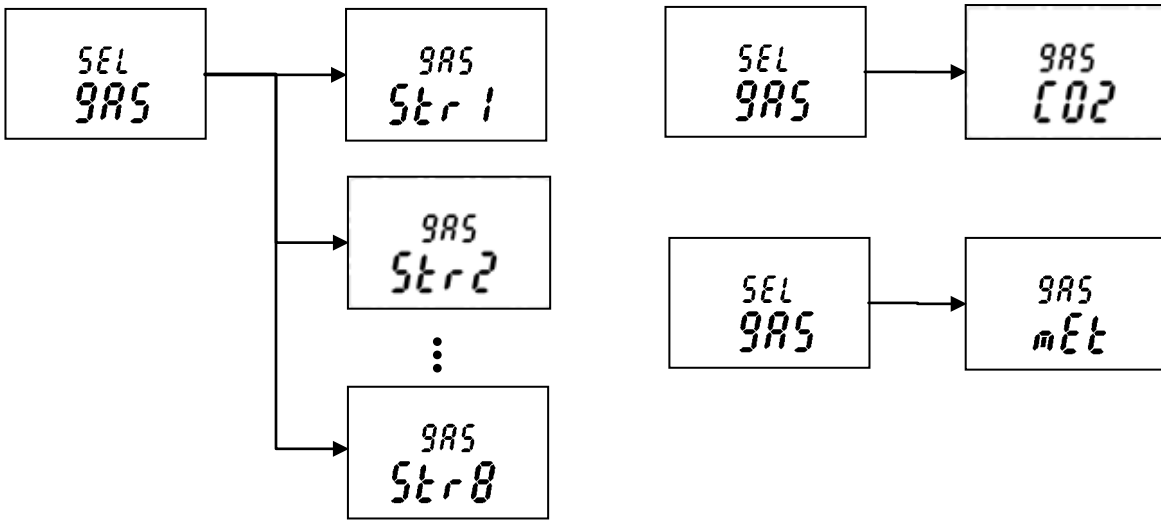

Diagram 16: Gas Selection

13.4 Review Mode

The instrument will enter Review mode when the “Enter” switch is activated with the Magnetic Wand and held for around one second.

Names, displays and descriptions for each review item in Review Mode are shown in the following table.

Item name	Display	Description
Software version		S/W version of transmitter
SRS version	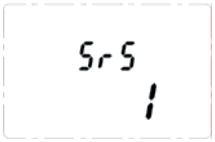	S/W version of SRS (watch dog)
EEP version		EEPROM parameter version
Gas		Gas type
Measuring range		A user selected measuring range
Calibration level		Calibration gas level
Calibration due		Estimated time to next calibration
Alarm 1	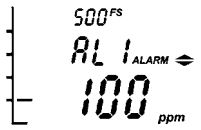 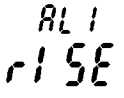	Alarm settings for Alarm 1
Alarm 2	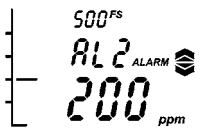 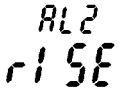	Alarm settings for Alarm 2

Location		Location in which the transmitter is installed
Power		Power voltage*
Temperature		Internal Transmitter temperature*
Peak conc.		Maximum concentration detected up to now
Test Result		There is no fault detected.

Table 8: Transmitter menu descriptions

Note:
**Power voltage and internal transmitter temperature may be different from actual value due to measuring accuracy and internal heating components.*

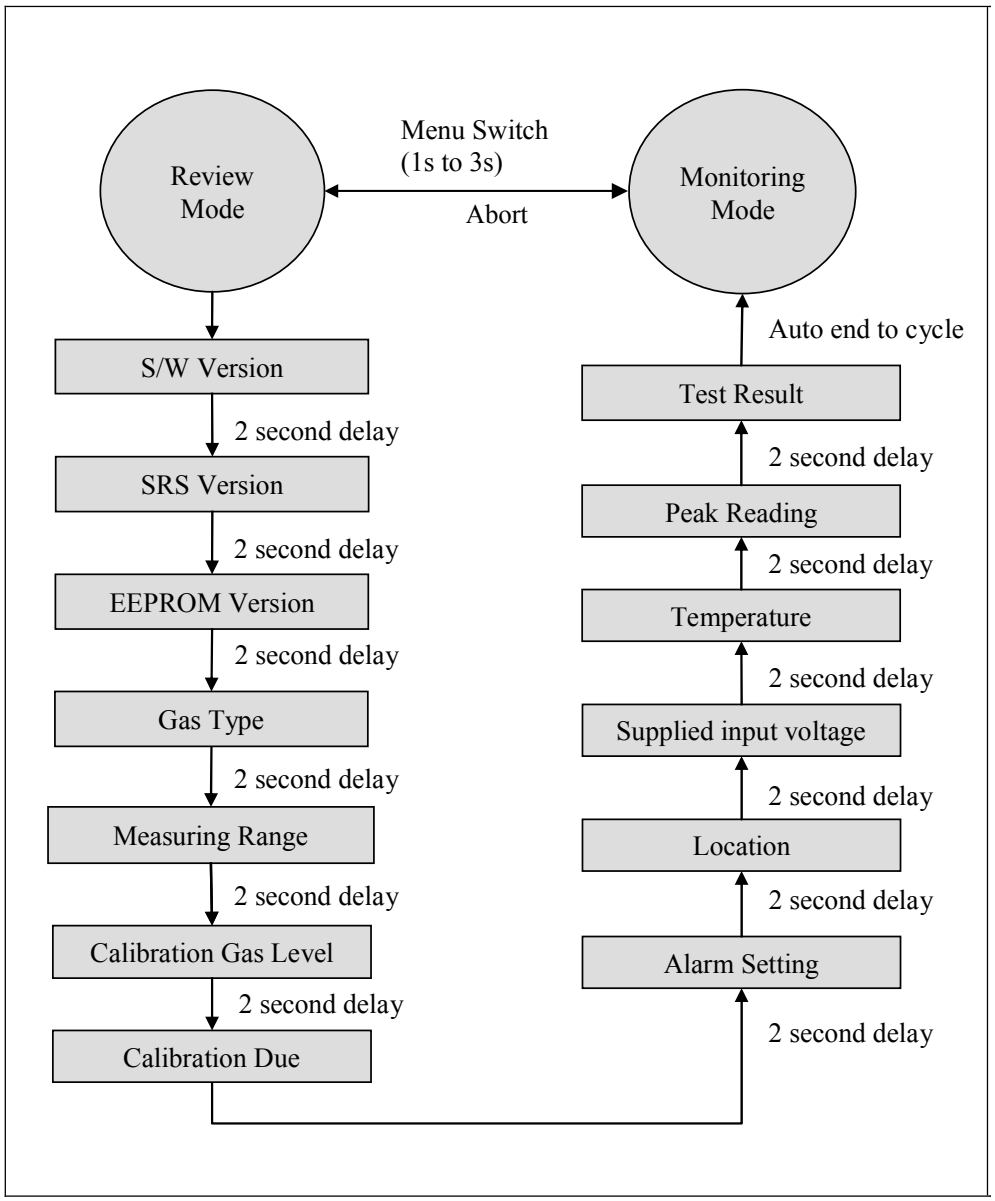

Diagram 17: Review Mode

14 General specification

Sensepoint XCD Transmitter.		
Use	3-wire, 4-20mA, gas detector transmitter for use with directly installed flammable and toxic gas sensors. For the protection of personnel and plant from flammable and toxic gas hazards.	
Electrical		
	Input Voltage Range:	16 to 32Vdc (24Vdc nominal) for ATEX/IECEx/AP Versions 12 to 32Vdc (24Vdc nominal) for UL/CSA version
	Max Power Consumption:	Max 5 Watts. at 24Vdc (see section 2 regarding maximum in rush current)
	Current output	4-20mA (Source or Sink)
	≥0.0<1.0 mA	Fault (refer to table 5 section 12.3 for further details).
	4.0 mA to 20.0 mA	Normal gas measurement
	2.0 mA or 4.0 mA (17.4 mA)	Inhibit (during configuration/user settings)
	22.0 mA	Maximum over range
	Max load resistance	250 Ω
	Terminals	15 x screw terminals suitable for wire diameter 0.5mm^2 to 2.5mm^2 (20AWG to 13AWG).
	Relays	3 x 5A@250VAC. Selectable normally open or normally closed (switch) and energized/de-energized (programmable).
	Communication	RS485, Modbus RTU
Construction		
Material	Epoxy painted aluminium alloy or 316 Stainless Steel	
Weight	Aluminium alloy: 1.7kg, 316 Stainless Steel: 3.7kg	
Mounting	Pole or wall mounting	
Entries	2 x M20 (for ATEX/IECEx/AP Approval) or 2x3/4NPT (for UL Approval)	
Certification		
China	GB Ex d IIC T4 GB3836.1&2 -2000, PA, (CCCF)	
Korea	KTL Ex d IIC T6 (-40ºC to +65ºC)	
US	UL - Class I, Division 1, Groups B, C and D, Class I, Division 2, Groups B, C & D, Class II, Division, Groups E, F & G, Class II, Division 2, Groups F & G. -40ºC to+65ºC	
European	ATEX Ex II 2 GD Ex d IIC Gb T6(Ta -40ºC to +65ºC) T5 (Ta -40ºC to +75ºC) Ex tb IIIC T85ºC Db IP66 T100ºC (Ta -40ºC to +75ºC)	
International	IEC Ex II 2 GD Ex d IIC Gb T6(Ta -40ºC to +65ºC) T5 (Ta -40ºC to +75ºC) Ex tb IIIC T85ºC Db IP66 T100ºC (Ta -40ºC to +75ºC)	
Performance	EN50271, EN60079-29-1 (Flammable), EN50104 (Oxygen), EN45544 (Toxic)	
Marine	MED (O_2, FL-CAT, FL-IR), ABS (FL-CAT, FL-IR, H_2S), CCS (O_2, FL, Toxic), BV(H_2S)	
CE	EN50270:2015 EN6100-6-4:2007	
Environmental		
IP Rating	IP66 in accordance with EN60529:1992	
Operating Temperature	-40ºC to +75ºC/ -40ºF to +167ºF Note: The detector display may become illegible at temperatures below -40°C, but the detector continues its gas monitoring function. The display is not damaged and recovers when the temperature rises back above -20 °C.	
Operating Humidity	Continuous 20-90%RH (non condensing), Intermittent 10-99%RH (non condensing)	
Operating Pressure	90-110kPa (EC Toxic Sensors), 80-120kPa (EC Oxygen, Catalytic Bead and Infrared Sensors)	
Storage Conditions (detector and accessories)	-25°C to +65°C (-13°F to +149°F)	

Detectable Gases & Performance (See notes below)														
Gas	User Selectable Full Accuracy Scale Range	Default Range	Steps	User Selectable Cal Gas Range	Default Cal Point	Response Time (T90) secs	Recovery Time for Toxic Sensors (T10) secs	Accuracy	Operating Temperature*		Default alarm points		Lowest Alarm Level	Performance Approved
									Min	Max	A1	A2		
Electrochemical Sensors														
Oxygen	25.0%V/V only	25.0%V/V	n/a	20.9%V/V (Fixed)	20.9%V/V	<30[7]	40	<+/-0.5%V/V	-20°C / -4°F	55°C / 131°F	19.5%V/V▼	23.5%V/V▲	5%V/V	✔
Hydrogen Sulfide	10.0 to 100.0ppm	50.0ppm	1.0ppm	30 to 70% of selected full scale range	25.0ppm	<50	40	<+/-1ppm	-20°C / -4°F	55°C / 131°F	10.0ppm▲	20.0ppm▲	1.0ppm	✔
Carbon Monoxide	100 to 1,000ppm	300ppm	100ppm		100ppm	<30	40	<+/-6ppm	-20°C / -4°F	55°C / 131°F	100ppm▲	200ppm▲	15ppm	✔
Hydrogen	1,000ppm only	1,000ppm	n/a		500ppm	<65	110	<+/-25ppm	-20°C / -4°F	55°C / 131°F	200ppm▲	400ppm▲	100ppm	
Nitrogen Dioxide**	10.0 to 50.0 ppm	10.0 ppm	5.0 ppm		5.0 ppm	<40	75	+/-3ppm or +/-20%	-20°C / -4°F	55°C / 131°F	5ppm ▲	10ppm▲	0.6ppm	
Catalytic Bead Sensors				25 to 95 % of selected full scale range										
Flammable 1 to 8*	20 to 100%LEL	100%LEL	10%LEL		50%LEL	<25[8]	N/A	<+/-1.5%LEL	-20°C / -4°F	55°C / 131°F	20%LEL▲	40%LEL▲	10-40%LEL dependent on star rating	Methane, Ethane and Propane
Infrared Sensors				30 to 70% of selected full scale range										
Methane	20 to 100%LEL	100%LEL	10%LEL		50%LEL	<30	N/A	<+/-1.5%LEL	-20°C / -4°F	55°C / 131°F	20%LEL▲	40%LEL▲	10%LEL	
Propane	20 to 100%LEL	100%LEL	10%LEL		50%LEL	<30	N/A	<+/-1.5%LEL	-20°C / -4°F	55°C / 131°F	20%LEL▲	40%LEL▲	10%LEL	
Carbon Dioxide	2.00%V/V only	2.00%V/V	n/a		1.00%V/V	<30	100	<+/-0.04%V/V	-20°C / -4°F	55°C / 131°F	0.40%V/V▲	0.80%V/V▲	0.25%V/V	
Carbon Dioxide	5.00%V/V only	5.00%V/V	n/a		2.50%V/V	<60	<70	<+/-0.2%V/V	-20°C / -4°F	50°C / 122°F	0.40%V/V▲	0.80%V/V▲	0.25%V/V	

▲ - Rising Alarm ▼ - Falling Alarm

NOTES

Performance figures are taken at 20~25°C;

1. measured using a sample humidity of 50%RH, applicable between 10 and 90% of full scale,
2. measured using test units calibrated at 50% of full scale,
3. measured at 1000cc/min for Methane CAT, 500cc/min for O2, Toxic and Methane/Carbon Dioxide IR with calibration cup (S3KCAL).
4. Toxic and Oxygen sensor recovery times are taken at 20°C, 50%RH and 500cc/min with calibration cup (S3KCAL).
5. The maximum recommended alarm level for flammable sensors according to EN60079-29-1 is 60%LEL.
6. Please note that XCD oxygen transmitter is intended for the measurement of oxygen deficiency or enrichment and not for inertization measurements.
7. Response time (T90) under test conditions of EN 50104 ≤ 38 s
8. Response time (T90) under test conditions of EN 60079-29-1 for methane ≤ 55 s, for propane ≤ 60 s.

Response time (T90) may increase when operating in lower or higher temperature conditions or when gas is introduced with the Weather Protection accessory (SPXCDWP) fitted. Methane IR sensor is calibrated and linearised only for Methane. Should it be exposed to other HC then non linear response is expected. For linearised operation other than Methane contact HA for alternate parts. Flammable CAT and Methane IR is calibrated at the factory 50%LEL Methane (2.5%V/V). This calibration enables 100% functional test prior to dispatch. This calibration does not remove need for calibration & test as part of commissioning at site.
For gases other than Methane the unit has to be calibrated at site using target gas.Data represents typical values, and system conditioning may be required to achieve stated result. Contact HA for details.

* Extended operating temperature range of -40°C to +65°C (-40°F to +149°F) for all sensor except for IR and H2 EC sensors, with an accuracy of +/- 30% of applied gas from -20°C to -40°C (-4°F to -40°F) and +55°C to +65°C (+131°F to +149°F). For the Methane IR Sensors, the accuracy is +/-10% LEL from - 20°C to -40°C.
Long term operation at this range may cause decline in sensor performance.

** Care should be taken when setting alarm points lower than 3ppm especially in high humidity conditions (higher than 50%RH), since the gas reading could be lower than the actual concentration.
Contact Honeywell Analytics for any additional data or details.

15 Ordering information

Part number	Description
Sensepoint XCD transmitter and sensor KIT (ATEX/IECEx/AP*, LM25 and M20 Entry)	
SPXCDALMFX	ATEX/IECEx/AP* Methane CAT 0-100%LEL (20,0 to 100.0%LEL, 10%LEL) with LM25, M20 Entry
SPXCDALMRX	ATEX/IECEx/AP* Methane IR 0-100%LEL (20,0 to 100.0%LEL, 10%LEL) with LM25, M20 Entry
SPXCDALMPX	ATEX/IECEx/AP* Propane IR 0-100%LEL (20,0 to 100.0%LEL, 10%LEL) with LM25, M20 Entry
SPXCDALMO1	ATEX/IECEx/AP* Oxygen 25.0%/Vol with LM25, M20 Entry
SPXCDALMHX	ATEX/IECEx/AP* Hydrogen Sulfide 0-50ppm (10.0 to 100.0ppm, 1ppm) with LM25, M20 Entry
SPXCDALMCX	ATEX/IECEx/AP* Carbon Monoxide 0-500ppm (100 to 1000ppm, 100ppm) with LM25, M20 Entry
SPXCDALMG1	ATEX/IECEx/AP* Hydrogen 0-1000ppm with LM25, M20 Entry
SPXCDALNNX	ATEX/IECEx/AP* Nitrogen Dioxide 0-50ppm with Aluminium alloy, M20 Entry
SPXCDALMB1	ATEX/IECEx/AP* approved Carbon Dioxide IR 0-2.00%VOL with LM25, M20 Entry
SPXCDALMB2	ATEX/IECEx/AP* approved Carbon Dioxide IR 0-5.00%VOL with LM25, M20 Entry
Sensepoint XCD transmitter and sensor KIT (ATEX/IECEx/AP*, 316SS and M20 Entry)	
SPXCDASMFX	ATEX/IECEx/AP* approved Methane CAT 0-100%LEL (20 to 100%LEL, 10%LEL) with 316SS, M20 Entry
SPXCDASMRX	ATEX/IECEx/AP* approved Methane IR 0-100%LEL (20 to 100%LEL, 10%LEL) with 316SS, M20 Entry
SPXCDASMPX	ATEX/IECEx/AP* approved Propane IR 0-100%LEL (20 to 100%LEL, 10%LEL) with 316SS, M20 Entry
SPXCDASMO1	ATEX/IECEx/AP* approved Oxygen 25.0%/Vol with 316SS, M20 Entry
SPXCDASMHX	ATEX/IECEx/AP* approved Hydrogen Sulfide 0-50ppm (10.0 to 100.0ppm, 1ppm) with 316SS, M20 Entry
SPXCDASMCX	ATEX/IECEx/AP* approved Carbon Monoxide 0-300ppm (100 to 1000ppm, 100ppm) with 316SS, M20 Entry
SPXCDASMG1	ATEX/IECEx/AP* approved Hydrogen 0-1000ppm with 316SS, M20 Entry
SPXCDASNNX	ATEX/IECEX/ AP* approved Nitrogen Dioxide 0-50ppm with SS316, M20 Entry
SPXCDASMB1	ATEX/IECEx/AP* approved Carbon Dioxide IR 0-2.00%VOL with 316SS, M20 Entry
SPXCDASMB2	ATEX/IECEx/AP* approved Carbon Dioxide IR 0-5.00%VOL with 316SS, M20 Entry
Sensepoint XCD transmitter and sensor KIT (UL, LM25 and 3/4”NPT Entry)	
SPXCDULNFX	UL/cUL approved Methane CAT 0-100%LEL (20 to 100%LEL, 10%LEL) with LM25, 3/4"NPT Entry
SPXCDULNRX	UL/cUL approved Methane IR 0-100%LEL (20 to 100%LEL, 10%LEL) with LM25, 3/4"NPT Entry
SPXCDULNPX	UL/cUL approved Propane IR 0-100%LEL (20 to 100%LEL, 10%LEL) with LM25, 3/4"NPT Entry
SPXCDULNO1	UL/cUL approved Oxygen 25.0%/Vol with LM25, 3/4"NPT Entry
SPXCDULNHX	UL/cUL approved Hydrogen Sulfide 0-50ppm (10.0 to 100.0ppm, 1ppm) with LM25, 3/4"NPT Entry
SPXCDULNCX	UL/cUL approved Carbon Monoxide 0-300ppm (100 to 1000ppm, 100ppm) with LM25, 3/4"NPT Entry
SPXCDULNG1	UL/cUL approved Hydrogen 0-1000ppm with LM25, 3/4"NPT Entry
SPXCDULNNX	UL approved SP XCD Nitrogen Dioxide 0-50ppm with LM25, 3/4"NPT Entry
SPXCDULNB1	UL/cUL approved Carbon Dioxide IR 0-2.00%VOL with LM25, 3/4"NPT Entry
SPXCDULNB2	UL/cUL approved Carbon Dioxide IR 0-5.00%VOL with LM25, 3/4"NPT Entry
Sensepoint XCD transmitter and sensor KIT (UL, 316SS and 3/4”NPT Entry)	
SPXCDUSNFX	UL/cUL approved Methane CAT 0-100%LEL (20 to 100%LEL, 10%LEL) with 316SS, 3/4"NPT Entry
SPXCDUSNRX	UL/cUL approved Methane IR 0-100%LEL (20 to 100%LEL, 10%LEL) with 316SS, 3/4"NPT Entry
SPXCDUSNPX	UL/cUL approved Propane IR 0-100%LEL (20 to 100%LEL, 10%LEL) with 316SS, 3/4"NPT Entry
SPXCDUSNO1	UL/cUL approved Oxygen 25.0%/Vol with 316SS, 3/4"NPT Entry
SPXCDUSNHX	UL/cUL approved Hydrogen Sulfide 0-50ppm (10.0 to 100.0ppm, 1ppm) with 316SS, 3/4"NPT Entry
SPXCDUSNCX	UL/cUL approved Carbon Monoxide 0-300ppm (100 to 1000ppm, 100ppm) with 316SS, 3/4"NPT Entry
SPXCDUSNG1	UL/cUL approved Hydrogen 0-1000ppm with 316SS, 3/4"NPT Entry
SPXCDUSNNX	UL approved SP XCD Nitrogen Dioxide 0-50ppm with SS316, 3/4"NPT Entry
SPXCDUSNB1	UL/cUL approved Carbon Dioxide IR 0-2.00%VOL with 316SS, 3/4"NPT Entry
SPXCDUSNB2	UL/cUL approved Carbon Dioxide IR 0-5.00%VOL with 316SS, 3/4"NPT Entry
Sensepoint XCD transmitter and sensor KIT (ATEX/IECEx/AP*, LM25 and M20 Entry with ModBus)	
SPXCDALMFXM	ATEX/IECEx/AP* Methane CAT 0-100%LEL (20,0 to 100.0%LEL, 10%LEL) with LM25, M20 Entry, with ModBus
SPXCDALMRXM	ATEX/IECEx/AP* Methane IR 0-100%LEL (20,0 to 100.0%LEL, 10%LEL) with LM25, M20 Entry, with ModBus
SPXCDALMPXM	ATEX/IECEx/AP* Propane IR 0-100%LEL (20,0 to 100.0%LEL, 10%LEL) with LM25, M20 Entry, with ModBus
SPXCDALMO1M	ATEX/IECEx/AP* Oxygen 25.0%/Vol with LM25, M20 Entry, with ModBus
SPXCDALMHXM	ATEX/IECEx/AP* Hydrogen Sulfide 0-50ppm (10.0 to 100.0ppm, 1ppm) with LM25, M20 Entry, with ModBus
SPXCDALMCXM	ATEX/IECEx/AP* Carbon Monoxide 0-500ppm (100 to 1000ppm, 100ppm) with LM25, M20 Entry, with ModBus
SPXCDALMG1M	ATEX/IECEx/AP* Hydrogen 0-1000ppm with LM25, M20 Entry, with ModBus
SPXCDALNNXM	ATEX/IECEX /AP approved Nitrogen Dioxide 0-50ppm with LM25, M20 Entry, With Modbus
SPXCDALMB1M	ATEX/IECEx/AP* approved Carbon Dioxide IR 0-2.00%VOL with LM25, M20 Entry, with ModBus
SPXCDALMB2M	ATEX/IECEx/AP* approved Carbon Dioxide IR 0-5.00%VOL with LM25, M20 Entry, with ModBus
Sensepoint XCD transmitter and sensor KIT (ATEX/IECEx/AP*, 316SS and M20 Entry with ModBus)	
SPXCDASMFXM	ATEX/IECEx/AP* approved Methane CAT 0-100%LEL (20 to 100%LEL, 10%LEL) with 316SS, M20 Entry, with ModBus
SPXCDASMRXM	ATEX/IECEx/AP* approved Methane IR 0-100%LEL (20 to 100%LEL, 10%LEL) with 316SS, M20 Entry, with ModBus
SPXCDASMPXM	ATEX/IECEx/AP* approved Propane IR 0-100%LEL (20 to 100%LEL, 10%LEL) with 316SS, M20 Entry, with ModBus
SPXCDASMO1M	ATEX/IECEx/AP* approved Oxygen 25.0%/Vol with 316SS, M20 Entry, with ModBus
SPXCDASMHXM	ATEX/IECEx/AP* approved Hydrogen Sulfide 0-50ppm (10.0 to 100.0ppm, 1ppm) with 316SS, M20 Entry, with ModBus
SPXCDASMCXM	ATEX/IECEx/AP* approved Carbon Monoxide 0-300ppm (100 to 1000ppm, 100ppm) with 316SS, M20 Entry, with ModBus
SPXCDASMG1M	ATEX/IECEx/AP* approved Hydrogen 0-1000ppm with 316SS, M20 Entry, with ModBus
SPXCDASNNXM	ATEX/IECEX /AP approved Nitrogen Dioxide 0-50ppm with SS316, M20 Entry, With Modbus
SPXCDASMB1M	ATEX/IECEx/AP* approved Carbon Dioxide IR 0-2.00%VOL with 316SS, M20 Entry, with ModBus
SPXCDASMB2M	ATEX/IECEx/AP* approved Carbon Dioxide IR 0-5.00%VOL with 316SS, M20 Entry, with ModBus
UL APPROVAL (Epoxy Coated Aluminium Alloy, LM25, With Modbus)	
SPXCDULNFXM	UL/cUL approved Flammable CAT 0-100%LEL (20,0 to 100.0%LEL, 10%LEL) with LM25, 3/4"NPT Entry, with Modbus
SPXCDULNRXM	UL/cUL approved Methane IR 0-100%LEL (20,0 to 100.0%LEL, 10%LEL) with LM25, 3/4"NPT Entry, with Modbus
SPXCDULNPXM	UL/cUL approved Propane IR 0-100%LEL (20,0 to 100.0%LEL, 10%LEL) with LM25, 3/4"NPT Entry, with Modbus
SPXCDULNO1M	UL/cUL approved Oxygen 25.0%/Vol with LM25, 3/4"NPT Entry, with Modbus
SPXCDULNHXM	UL/cUL approved Hydrogen Sulfide 0-50ppm (10.0 to 100.0ppm, 1ppm) with LM25, 3/4"NPT Entry, with Modbus

SPXCDULNCXM	UL/cUL approved Carbon Monoxide 0-500ppm (100 to 1000ppm, 100ppm) with LM25, 3/4"NPT Entry, with Modbus
SPXCDULNG1M	UL/cUL approved Hydrogen 0-1000ppm with LM25, 3/4"NPT Entry, with Modbus
SPXCDULNNXM	UL/cUL approved Nitrogen Dioxide 0-50ppm with LM25, 3/4"NPT Entry, with Modbus
SPXCDULNB1M	UL/cUL approved Carbon Dioxide IR 0-2%VOL with LM25, 3/4"NPT Entry, with Modbus
SPXCDULNB2M	UL/cUL approved Carbon Dioxide IR 0-5%VOL with LM25, 3/4"NPT Entry, with Modbus
UL APPROVAL (Epoxy Coated Stainless Steel, SS316, With Modbus)	
SPXCDUSNFXM	UL/cUL approved Flammable CAT 0-100%LEL (20,0 to 100.0%LEL, 10%LEL) with SS316, 3/4"NPT Entry, with Modbus
SPXCDUSNRXM	UL/cUL approved Methane IR 0-100%LEL (20,0 to 100.0%LEL, 10%LEL) with SS316, 3/4"NPT Entry, with Modbus
SPXCDUSNPXM	UL/cUL approved Propane IR 0-100%LEL (20,0 to 100.0%LEL, 10%LEL) with SS316, 3/4"NPT Entry, with Modbus
SPXCDUSNO1M	UL/cUL approved Oxygen 25.0%/Vol with SS316, 3/4"NPT Entry, with Modbus
SPXCDUSNHXM	UL/cUL approved Hydrogen Sulfide 0-50ppm (10.0 to 100.0ppm, 1ppm) with SS316, 3/4"NPT Entry, with Modbus
SPXCDUSNCXM	UL/cUL approved Carbon Monoxide 0-500ppm (100 to 1000ppm, 100ppm) with SS316, 3/4"NPT Entry, with Modbus
SPXCDUSNG1M	UL/cUL approved Hydrogen 0-1000ppm with SS316, 3/4"NPT Entry, with Modbus
SPXCDUSNNXM	UL/cUL approved Nitrogen Dioxide 0-50ppm with SS316, 3/4"NPT Entry, with Modbus
SPXCDUSNB1M	UL/cUL approved Carbon Dioxide IR 0-2%VOL with SS316, 3/4"NPT Entry, with Modbus
SPXCDUSNB2M	UL/cUL approved Carbon Dioxide IR 0-5%VOL with SS316, 3/4"NPT Entry, with Modbus
Replacement sensor Cartridge	
SPXCDXSFXSS	Methane CAT 0-100%LEL (20,0 to 100.0%LEL, 10%LEL)
SPXCDXSRXSS	Methane IR 0-100%LEL (20,0 to 100.0%LEL, 10%LEL)
SPXCDXSPXSS	Propane IR 0-100%LEL (20,0 to 100.0%LEL, 10%LEL)
SPXCDXSO1SS	Oxygen 25.0%/Vol only
SPXCDXSHXSS	Hydrogen Sulfide 0-50ppm (10.0 to 100.0ppm, 1ppm)
SPXCDXSCXSS	Carbon Monoxide 0-500ppm (100 to 1000ppm, 100ppm)
SPXCDXSG1SS	Hydrogen 0-1000ppm only
SPXCDXSNXSS	Nitrogen Dioxide 0-10ppm (10.0 to 50.0ppm)
SPXCDXSB1SS	Carbon Dioxide IR 0-2.00%VOL only
SPXCDXSB2SS	Carbon Dioxide IR 0-5.00%VOL only
Accessories	
S3KCAL	Calibration cap
SPXCDCC	Collecting cone for use with lighter than air gases
SPXCDDMK	Duct mounting kit
SPXCDHMANEN	Hard Copy Manual in English
SPXCDMTBR	Pipe Mounting bracket (inc. fixings and hex wrench set)
SPXCDSDP	Sunshade / Deluge Protection
SPXCDHMANEN	Hard Copy Manual in English
SPXCDHMANCN	Hard Copy Manual in Chinese
SPXCDHMANKR	Hard Copy Manual in Korean
Spares	
SPXCDDMT	Replacement display module (O2 & Toxic) for 16-32 Vdc
SPXCDDMF	Replacement display module (FL & IR) for 16-32 Vdc
SPXCDTMO	Replacement terminal module (O2) for 16-32 Vdc
SPXCDTMT	Replacement terminal module (Toxic) for 16-32 Vdc
SPXCDTMF	Replacement terminal module (FL & IR) for 16-32 Vdc
SPXCDDMT12	Replacement display module (O2 & Toxic) for 12-32 Vdc
SPXCDDMF12	Replacement display module (FL & IR) for 12-32 Vdc
SPXCDTMO12	Replacement terminal module (O2) for 12-32 Vdc
SPXCDTMT12	Replacement terminal module (Toxic) for 12-32 Vdc
SPXCDTMF12	Replacement terminal module (FL & IR) for 12-32 Vdc
SPXCDMBUS	Replacement Modbus Module
SPXCDNPTP	3/4"NPT Plug
SPXCDM20P	M20 Plug
SPXCDMANCD	Instruction manual CD
SPXCDNADP	3/4"NPT to M20 Adaptor
SPXCDWP	Weather Protection
SPXCDMAG	Magnet
SPXCDSRLS	Sensor Retainer with locking screw
SPXCDAKS	Allen key for stopper
SPXCDHWES	Hex wrench for earth screw
SPXCDEBS	Earth Bracket and Screws
Special Flammable Gas Calibration	
SPXCDSFGC1	Special Flammable Gas Calibration, 0-100%LEL, 1*
SPXCDSFGC2	Special Flammable Gas Calibration, 0-100%LEL, 2*
SPXCDSFGC3	Special Flammable Gas Calibration, 0-100%LEL, 3*
SPXCDSFGC4	Special Flammable Gas Calibration, 0-100%LEL, 4*
SPXCDSFGC5	Special Flammable Gas Calibration, 0-100%LEL, 5*
SPXCDSFGC7	Special Flammable Gas Calibration, 0-100%LEL, 7*
SPXCDSFGC8	Special Flammable Gas Calibration, 0-100%LEL, 8*
Note: If no Special Flammable Gas Calibration part no. is included on PO, a Methane (6* calibration will be supplied)	

* AP approvals include GB & PA for China and KTL for Korea.

16 Warranty statement

All products are designed and manufactured to the latest internationally recognized standards by Honeywell Analytics under a Quality Management system that is certified to ISO 9001. As such Honeywell Analytics warrants its products against defective parts and workmanship and will repair or (at its option) replace any instruments which are or may become defective under proper use within 12 months from date of commissioning by an approved Honeywell Analytics representative
or 18 months from date of shipment from Honeywell Analytics, whichever is the sooner. This warranty does not cover disposable batteries or damage caused by accident, abuse, abnormal operating conditions or poisoning of sensor.

Defective goods must be returned to Honeywell Analytics premises accompanied by a detailed description of any issue. Where return of goods is not practicable Honeywell Analytics reserves the right to charge for any site attendance where any fault is not found with he the equipment. Honeywell Analytics shall not be liable for any loss or damage whatsoever or howsoever occasioned which may be a direct or indirect result of the use or operation of the Contract Goods by the Buyer or any Party.

This warranty covers instrument and parts sold to the Buyer only by authorized distributors, dealers and representatives as appointed by Honeywell Analytics. The warranties set out in this clause are not pro rata, i.e. the initial warranty period is not extended by virtue of any works carried out there under.

In no event will Honeywell Analytics be liable for any incidental damages, consequential damages, special damages, punitive damages, statutory damages, indirect damages, loss of profits, loss of revenues, or loss of use, even if informed of the possibility of such damages. Honeywell Analytic's liability for any claims arising out of or related to this product will in no case exceed the order value. To the extent permitted by applicable law, these limitations and exclusions will apply regardless of whether liability arises from breach of contract, warranty, tort (including but not limited to negligence), by operation of law, or otherwise.

17 Installation Drawing

17.1 Mechanical Installation Drawing

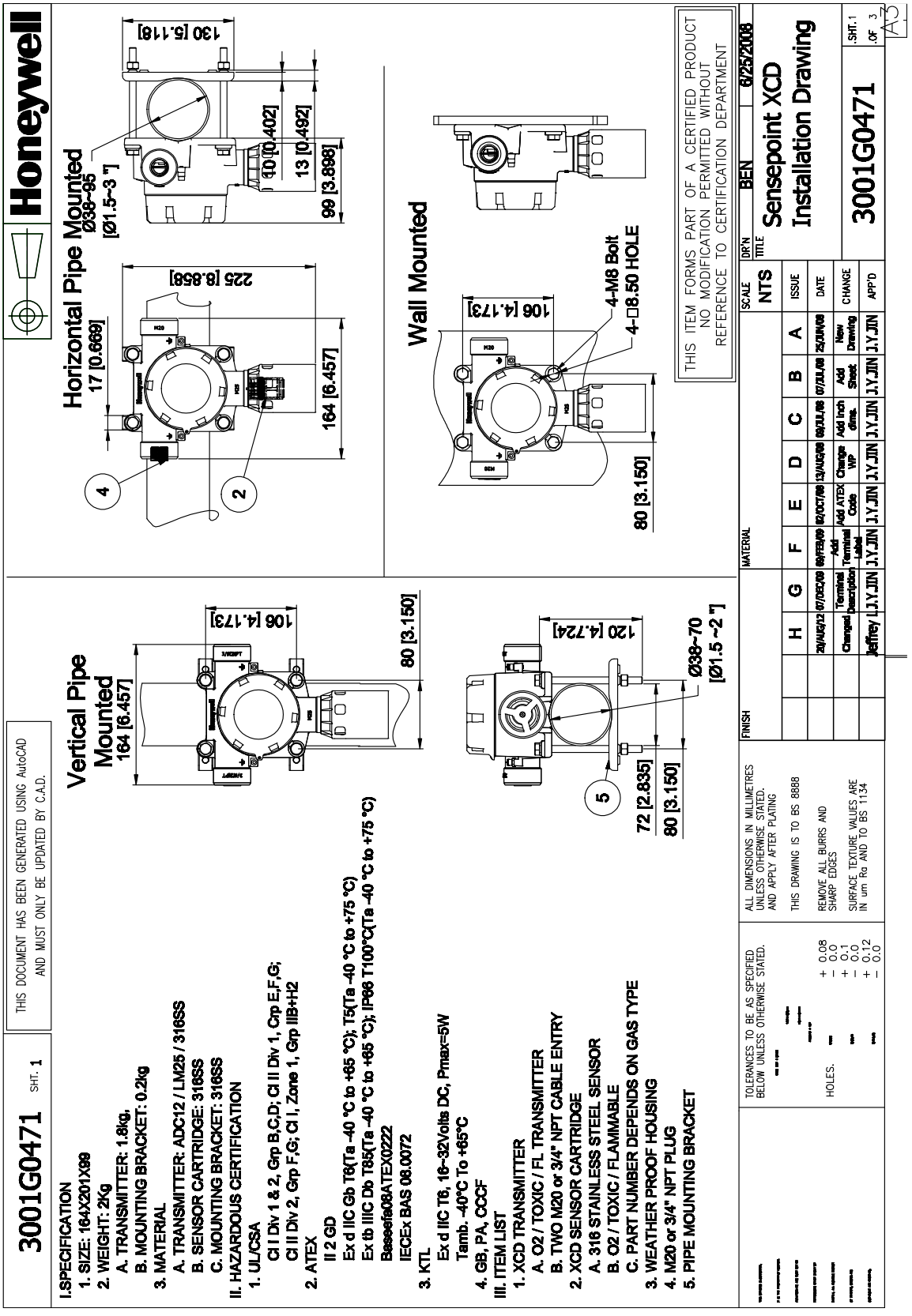

17.2 Electronic Connection Drawing

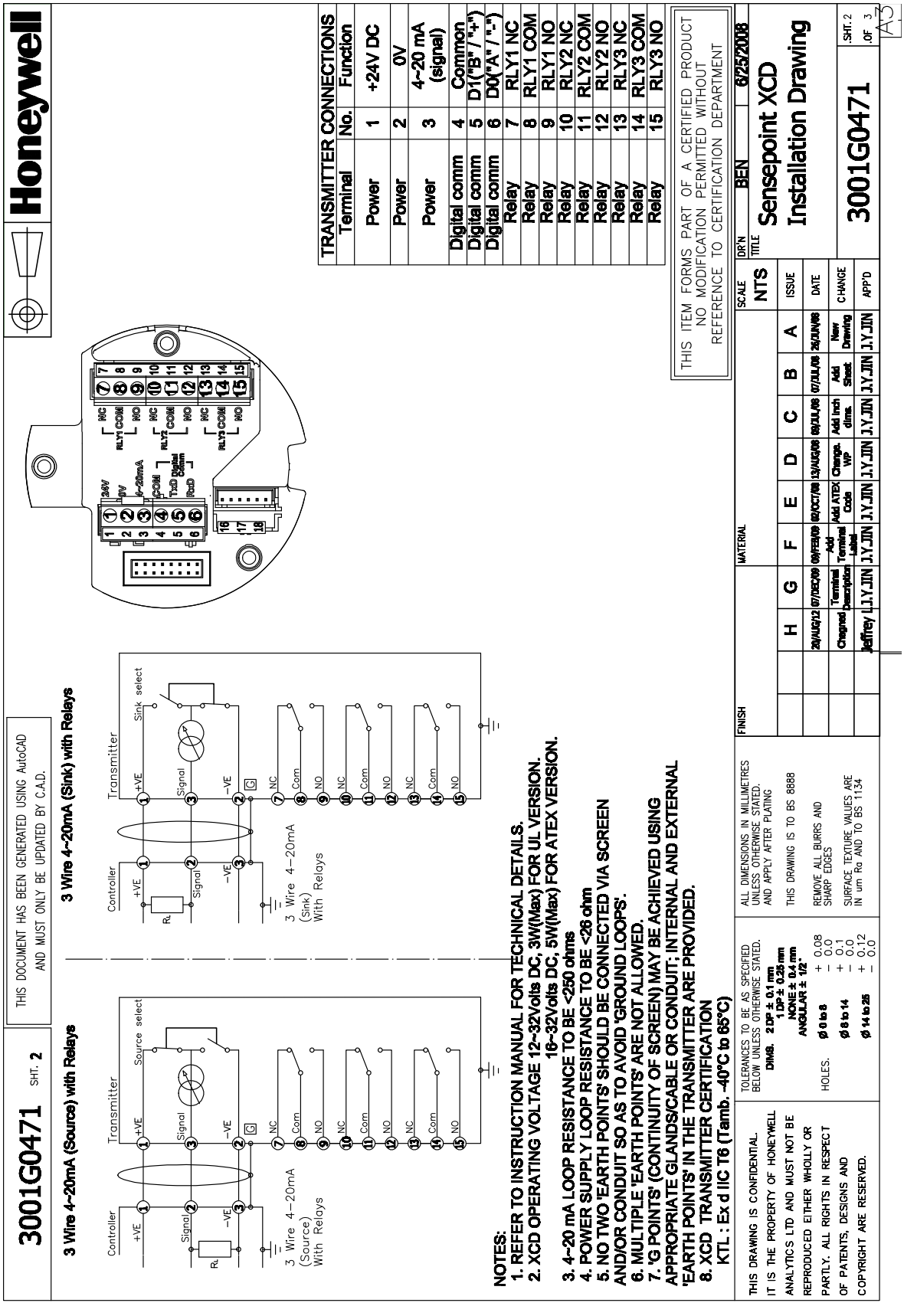

17.3 Duct Mounting Drawing

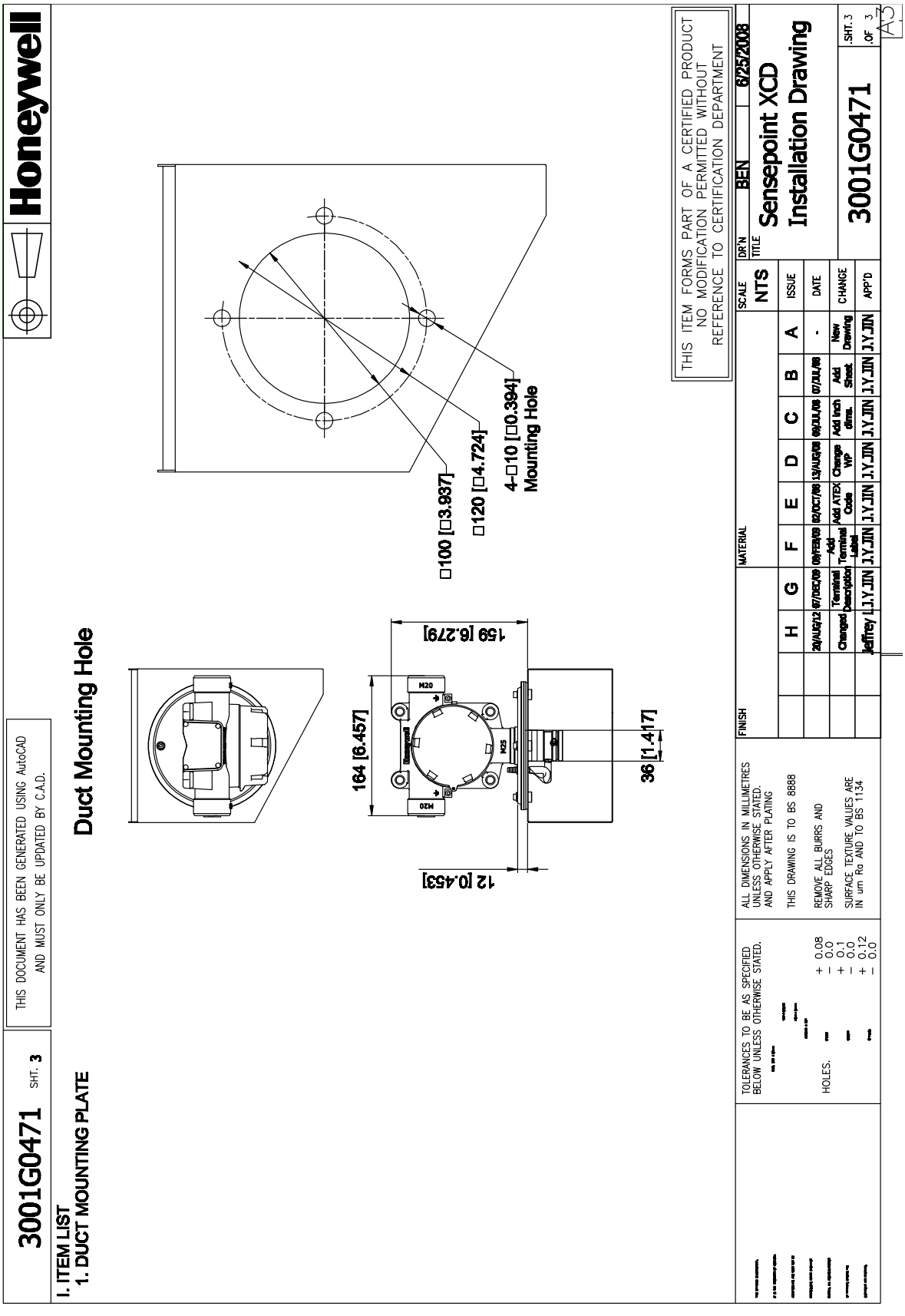

17.4 Collecting Cone Drawing

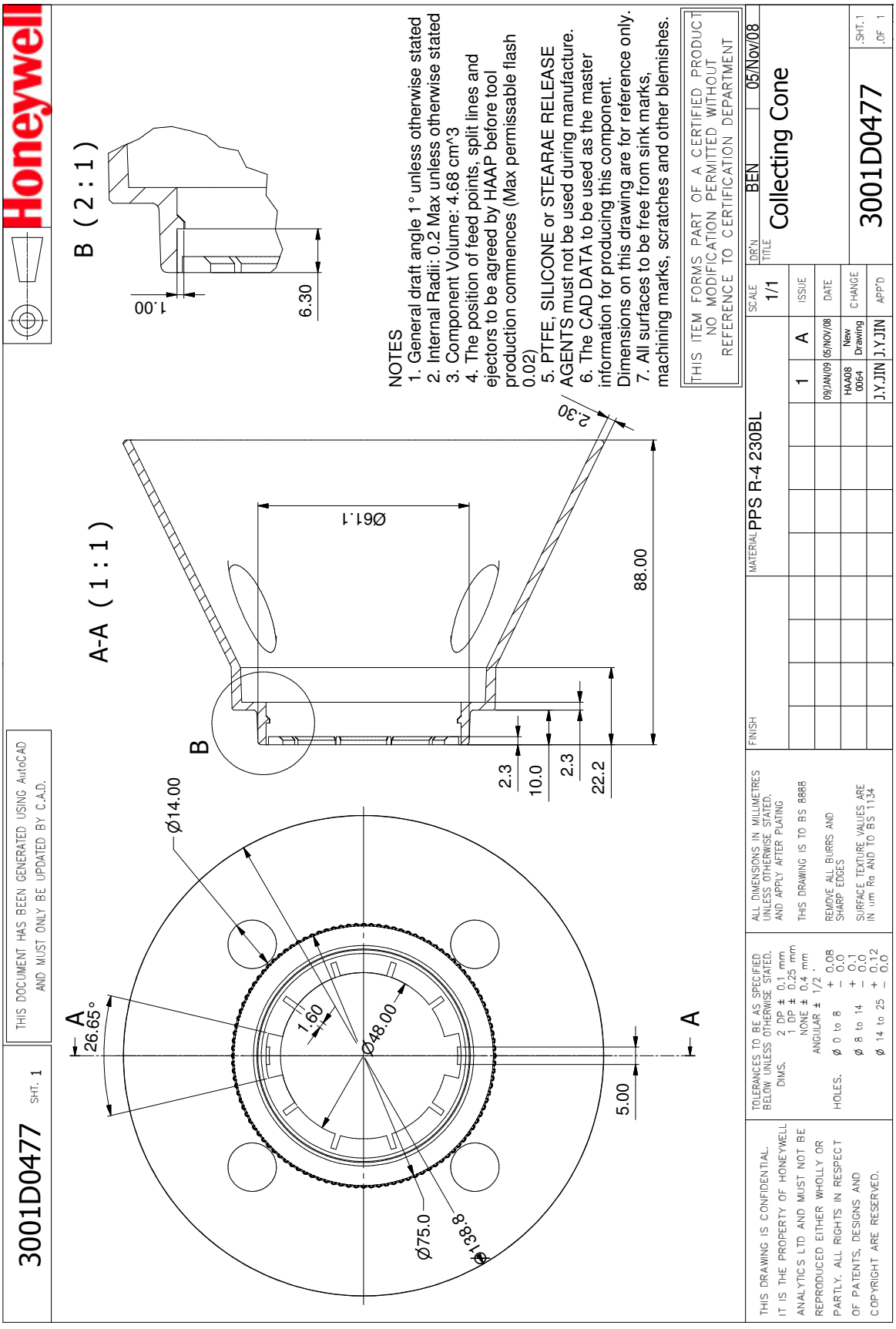

17.5 Mounting Bolt Assy Drawing

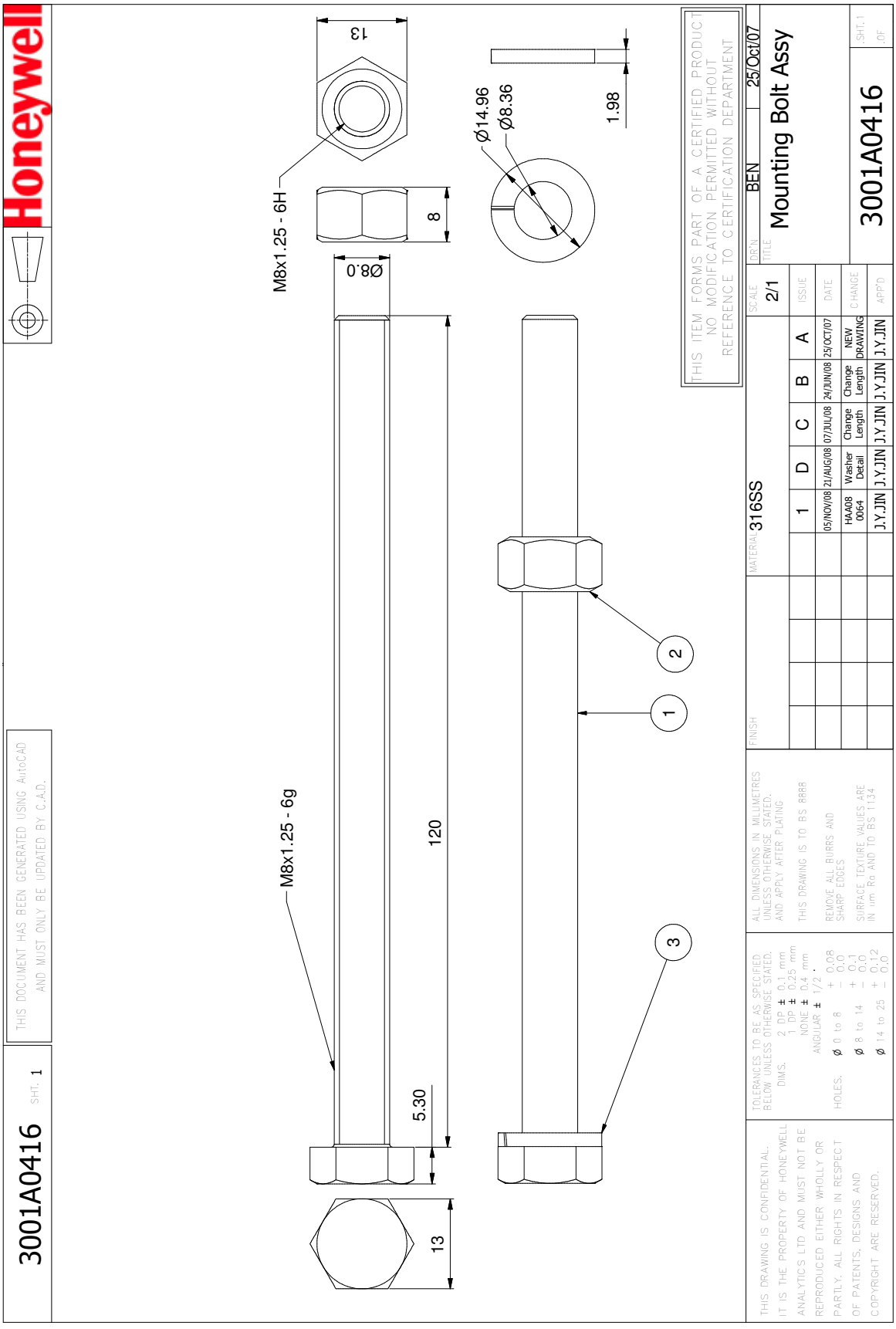

17.6 Mounting Bracket Drawing

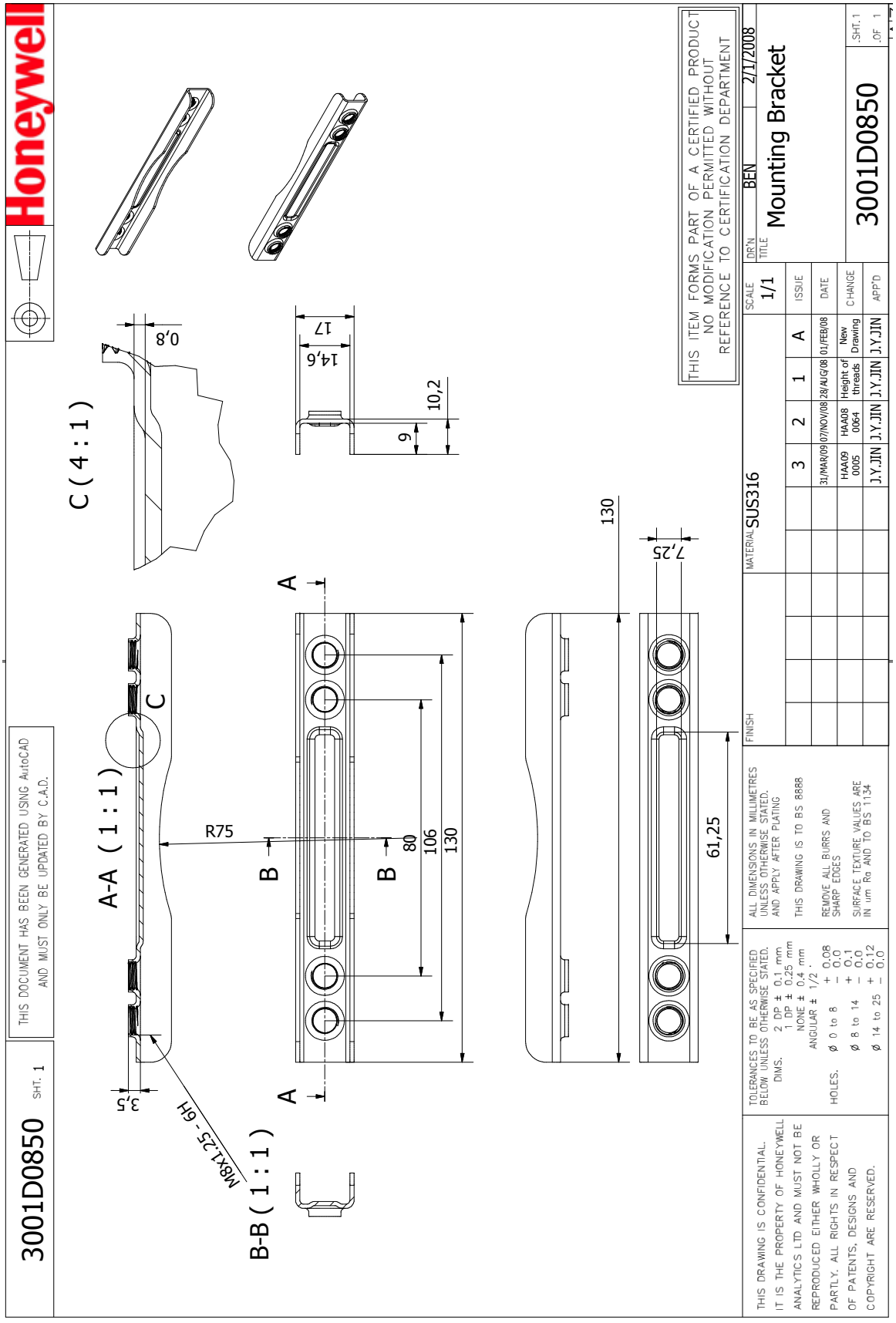

18 Certification

18.1 China GB Ex and PA

China GB Ex (Chinese Version):

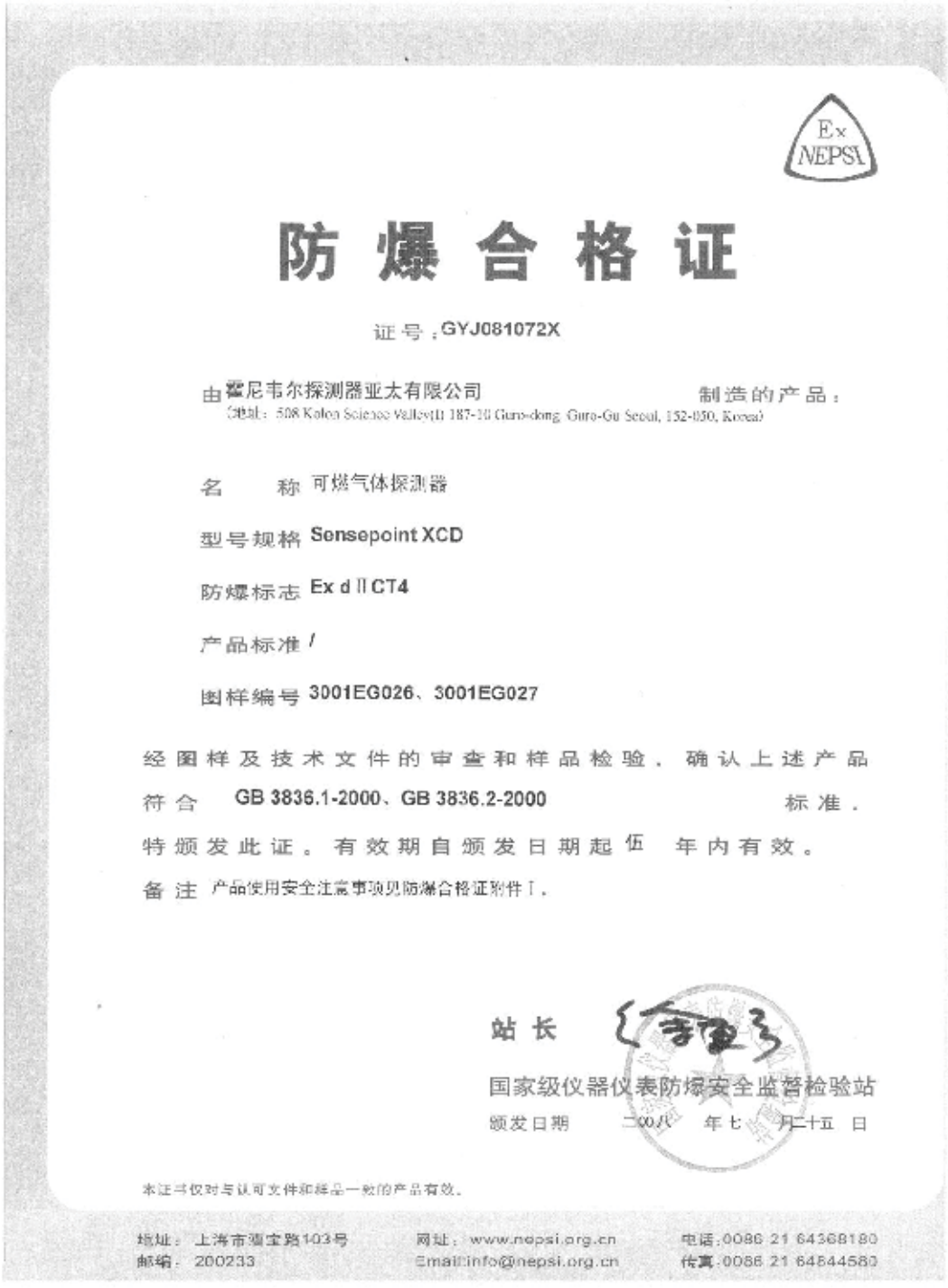

Ex NEPSI

防 爆 合 格 证

证 号：GYJ081072X

由霍尼韦尔探测器亚太有限公司 制造的产品：
(地址：508 Kolon Science Valley(I) 187-10 Guro-dong, Guro-Gu Seoul, 152-050, Korea)

名 称 可燃气体探测器

型号规格 Sensepoint XCD

防爆标志 Ex d ⅡCT4

产品标准 /

图样编号 3001EG026、3001EG027

经图样及技术文件的审查和样品检验，确认上述产品符合 GB 3836.1-2000、GB 3836.2-2000 标准。

特颁发此证。有效期自颁发日期起 伍 年内有效。

备注 产品使用安全注意事项见防爆合格证附件Ⅰ。

站长

国家级仪器仪表防爆安全监督检验站

颁发日期 二〇〇八 年七 月二十五 日

本证书仅对与认可文件和样品一致的产品有效。

地址：上海市漕宝路103号 网址：www.nepsi.org.cn 电话:0086 21 64368180
邮编：200233 Email:info@nepsi.org.cn 传真:0086 21 64844580

China GB Ex (English Version):

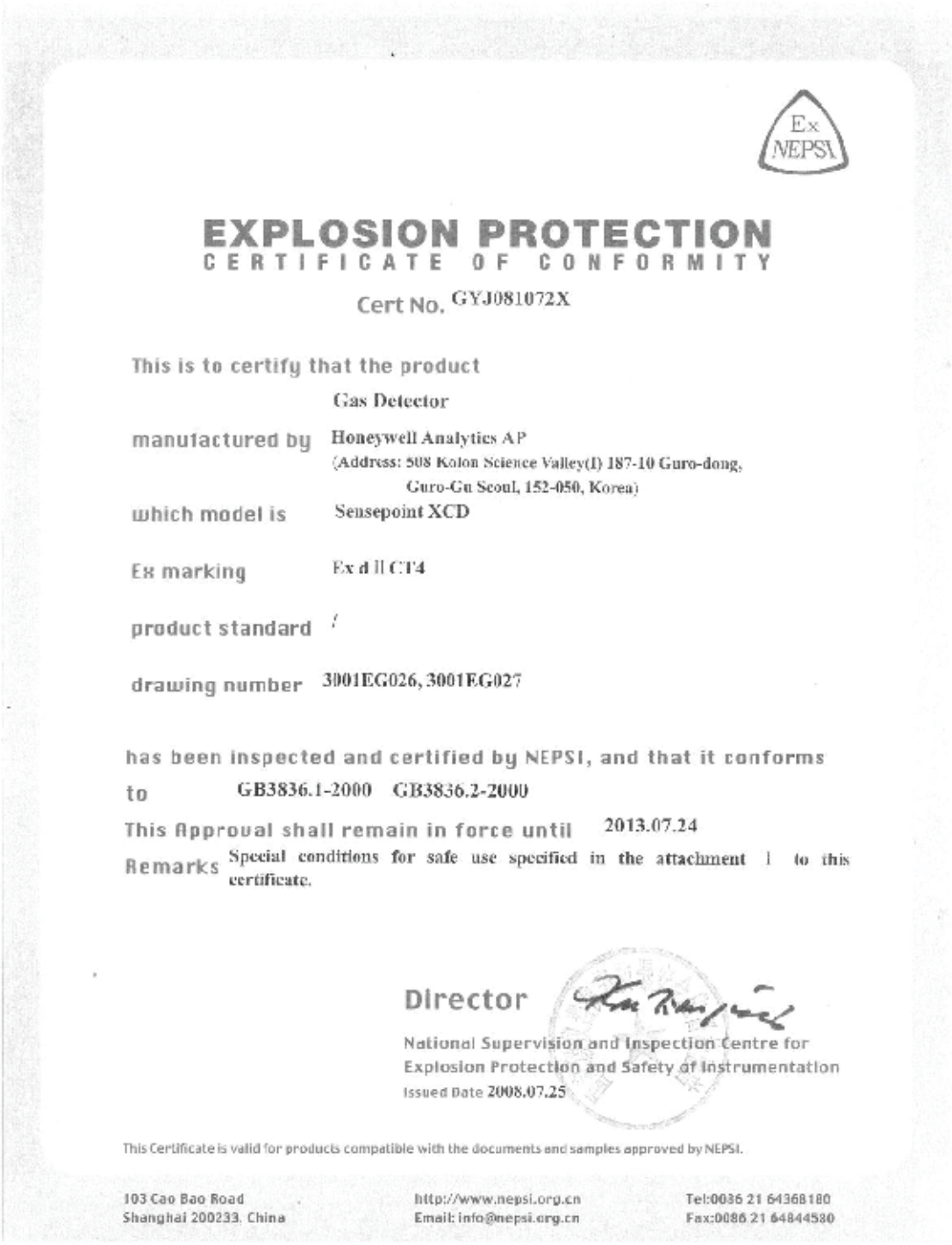

Ex NEPSI

EXPLOSION PROTECTION
CERTIFICATE OF CONFORMITY

Cert No. GYJ081072X

This is to certify that the product

Gas Detector

manufactured by Honeywell Analytics AP
(Address: 508 Kolon Science Valley(I) 187-10 Guro-dong, Guro-Gu Seoul, 152-050, Korea)

which model is Sensepoint XCD

Ex marking Ex d II CT4

product standard /

drawing number 3001EG026, 3001EG027

has been inspected and certified by NEPSI, and that it conforms to GB3836.1-2000 GB3836.2-2000

This Approval shall remain in force until 2013.07.24

Remarks Special conditions for safe use specified in the attachment 1 to this certificate.

Director

National Supervision and Inspection Centre for Explosion Protection and Safety of Instrumentation

Issued Date 2008.07.25

This Certificate is valid for products compatible with the documents and samples approved by NEPSI.

103 Cao Bao Road
Shanghai 200233, China

http://www.nepsi.org.cn
Email: info@nepsi.org.cn

Tel:0086 21 64368180
Fax:0086 21 64844580

China PA Certification:

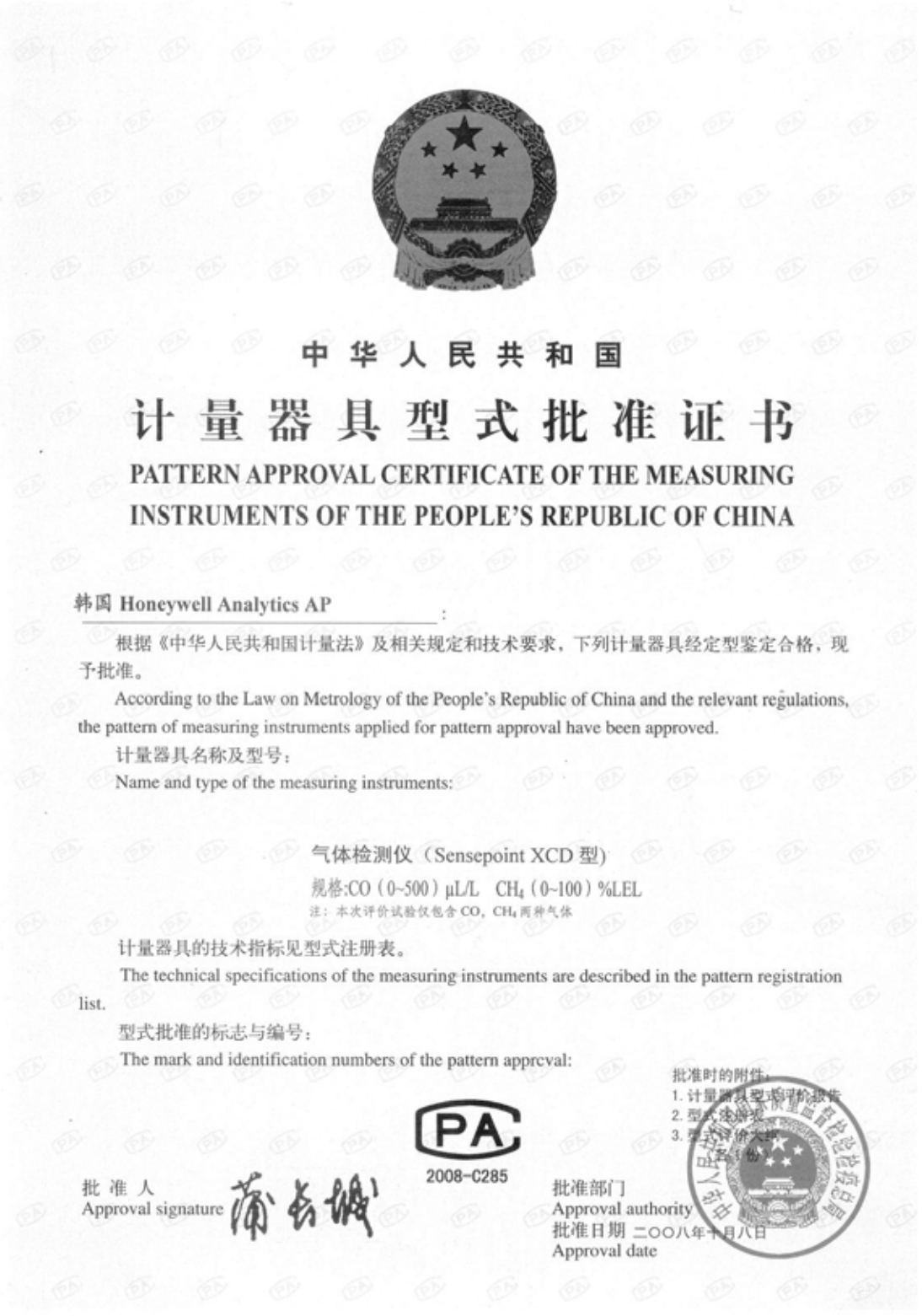

中华人民共和国

计量器具型式批准证书

PATTERN APPROVAL CERTIFICATE OF THE MEASURING INSTRUMENTS OF THE PEOPLE'S REPUBLIC OF CHINA

韩国 Honeywell Analytics AP：

根据《中华人民共和国计量法》及相关规定和技术要求，下列计量器具经定型鉴定合格，现予批准。

According to the Law on Metrology of the People's Republic of China and the relevant regulations, the pattern of measuring instruments applied for pattern approval have been approved.

计量器具名称及型号：

Name and type of the measuring instruments:

气体检测仪（Sensepoint XCD 型）

规格:CO（0~500）μL/L　CH_4（0~100）%LEL

注：本次评价试验仅包含 CO，CH_4 两种气体

计量器具的技术指标见型式注册表。

The technical specifications of the measuring instruments are described in the pattern registration list.

型式批准的标志与编号：

The mark and identification numbers of the pattern approval:

批准时的附件：
1. 计量器具型式评价报告
2. 型式注册表
3. 型式评价大纲
（各 1 份）

PA
2008-C285

批准人
Approval signature 蒲长城

批准部门
Approval authority
批准日期 二〇〇八年十月八日
Approval date

18.2 Korea KTL

제2013-019938-02호

ktl 한국산업기술시험원 Korea Testing Laboratory

안 전 인 증 서

한국하니웰(주) 천안공장
충청남도 천안시 서북구2공단2로 28 (성성동)

위 사업장에서 제조하는 아래의 품목이 「산업안전보건법」 제34조 및 같은 법 시행규칙 제58조의4제4항에 따른 안전인증 심사 결과 안전·보건기준에 적합하므로 안전인증표시의 사용을 인증합니다.

품 목
설치용 가스탐지기

형식·모델(용량·등급) / 인증번호
Sensepoint XCD Transmitter (Ex d IIC T6/T4) / 13-KB2BO-0407

인 증 기 준
고용노동부고시 제2010-36호

인 증 조 건

1. **제조공장**
   본 인증서는 '충청남도 천안시 서북구2공단2로 28 (성성동)'에서 생산하는 제품에 한함
2. **제품개요**
   -제품정격: 최대 32 V, 3.5 W
   -사용주위온도 : -40 ℃ ≤ Ta ≤ +65 ℃ (for T6) / +75 ℃ (for T4)
3. **인증범위** : 본 인증서는 위의 형식에 한하여 유효함
4. **안전한 사용을 위한 조건** : 없음
5. **인증(변경)사항** : 없음
6. **그 밖의 사항** : 없음

2013 년 7 월 18 일

한국산업기술시험원장

FP251-8

152-718 서울특별시 구로구 구로동 222-13 http://www.ktl.re.kr

ktl 한국산업기술시험원 Korea Testing Laboratory

제2013-019938-02호

안전인증면제확인서

신청인	사업장명	사업장관리번호
	한국하니웰(주) 천안공장	312-85-08708-0
	사업자등록번호	대표자 성명
	312-85-08708	홍 순 호
	소재지	
	충청남도 천안시 서북구2공단2로 28 (성성동)	

면제 확인번호	13-KB2BO-0407-ex
인증번호	IECEx BAS 08.0072 (Issue No. 5)
안전인증대상 기계·기구명	설치용 가스탐지기

형식(규격)	용량(등급)
Sensepoint XCD Transmitter	Ex d IIC T6/T4

면제내용	면제 항목
	형식별 제품심사
	면제 사유 (관련 법령 등)
	산업안전보건법 시행규칙 제58조의2(안전인증의 면제)
	안전인증면제 유효기간

「산업안전보건법」 제34조 및 같은 법 시행규칙 제58조의2제4항에 따라 안전인증 면제확인서를 발급합니다.

2013 년 7 월 18 일

한국산업기술시험원장

FP251-5

152-718 서울특별시 구로구 구로동 222-13 http://www.ktl.re.kr

18.3 European ATEX

ATEX For Transmitter:

Certificate Number
Baseefa08ATEX0222

Issued 31 October 2008
Page 1 of 2

1 **EC - TYPE EXAMINATION CERTIFICATE**

2 **Equipment or Protective System Intended for use in Potentially Explosive Atmospheres Directive 94/9/EC**

3 EC - Type Examination Certificate Number: **Baseefa08ATEX0222**

4 Equipment or Protective System: **A Type XCD Transmitter**

5 Manufacturer: **Honeywell Analytics**

6 Address: **405 Barclay Boulevard, Lincolnshire, IL 60069, USA.**

7 This equipment or protective system and any acceptable variation thereto is specified in the schedule to this certificate and the documents therein referred to.

8 Baseefa, Notified Body number 1180, in accordance with Article 9 of the Council Directive 94/9/EC of 23 March 1994, certifies that this equipment or protective system has been found to comply with the Essential Health and Safety Requirements relating to the design and construction of equipment and protective systems intended for use in potentially explosive atmospheres given in Annex II to the Directive.

The examination and test results are recorded in confidential Report No. **GB/BAS/ExTR08.0149/00**

9 Compliance with the Essential Health and Safety Requirements has been assured by compliance with:

IEC60079-0: 2007 EN60079-1: 2007 EN 61241-1: 2006

except in respect of those requirements listed at item 18 of the Schedule.

10 If the sign "X" is placed after the certificate number, it indicates that the equipment or protective system is subject to special conditions for safe use specified in the schedule to this certificate.

11 This EC - TYPE EXAMINATION CERTIFICATE relates only to the design and construction of the specified equipment or protective system. Further requirements of the Directive apply to the manufacturing process and supply of this equipment or protective system. These are not covered by this certificate.

12 The marking of the equipment or protective system shall include the following :

Ex **II GD Ex d IIC Gb T6 (Ta -40°C to +65°C) Ex tb IIIC T85°C Db IP66**

This certificate may only be reproduced in its entirety, without any change, schedule included.

Baseefa Customer Reference No. **5989** Project File No. **08/0201**

This certificate is granted subject to the general terms and conditions of Baseefa. It does not necessarily indicate that the equipment may be used in particular industries or circumstances.

DBrearley
pp DBREARLEY
R S SINCLAIR
DIRECTOR
On behalf of
Baseefa

Baseefa
Rockhead Business Park, Staden Lane,
Buxton, Derbyshire SK17 9RZ
Telephone +44 (0) 1298 766600 Fax +44 (0) 1298 766601
e-mail info@baseefa.com web site www.baseefa.com
Baseefa is a trading name of Baseefa Ltd
Registered in England No. 4305578. Registered address as above.

ATEX for Sensor

Certificate Number
Baseefa08ATEX0316X

Issued 9 March 2009
Page 1 of 2

1 **EC - TYPE EXAMINATION CERTIFICATE**

2 **Equipment or Protective System Intended for use in Potentially Explosive Atmospheres Directive 94/9/EC**

3 EC - Type Examination Certificate Number: **Baseefa08ATEX0316X**

4 Equipment or Protective System: **A Type XCD Gas Sensor Head**

5 Manufacturer: **Honeywell Analytics Inc.**

6 Address: **405 Barclay Boulevard, Lincolnshire, IL 60069, USA.**

7 This equipment or protective system and any acceptable variation thereto is specified in the schedule to this certificate and the documents therein referred to.

8 Baseefa, Notified Body number 1180, in accordance with Article 9 of the Council Directive 94/9/EC of 23 March 1994, certifies that this equipment or protective system has been found to comply with the Essential Health and Safety Requirements relating to the design and construction of equipment and protective systems intended for use in potentially explosive atmospheres given in Annex II to the Directive.

The examination and test results are recorded in confidential Report No. **GB/BAS/ExTR08.0220/00**

9 Compliance with the Essential Health and Safety Requirements has been assured by compliance with:

IEC 60079-0: 2007 **EN 60079-1: 2007** **EN 61241-1: 2004**

except in respect of those requirements listed at item 18 of the Schedule.

10 If the sign "X" is placed after the certificate number, it indicates that the equipment or protective system is subject to special conditions for safe use specified in the schedule to this certificate.

11 This EC - TYPE EXAMINATION CERTIFICATE relates only to the design and construction of the specified equipment or protective system. Further requirements of the Directive apply to the manufacturing process and supply of this equipment or protective system. These are not covered by this certificate.

12 The marking of the equipment or protective system shall include the following :

Ⓔx II 2 GD Ex d IIC T6 (Ta -40°C to +65°C) Gb Ex tb IIIC T85°C Db IP6X A21

This certificate may only be reproduced in its entirety, without any change, schedule included.

Baseefa Customer Reference No. **5989** Project File No. **08/0261**

This certificate is granted subject to the general terms and conditions of Baseefa. It does not necessarily indicate that the equipment may be used in particular industries or circumstances.

R S SINCLAIR
DIRECTOR
On behalf of
Baseefa

Baseefa
Rockhead Business Park, Staden Lane,
Buxton, Derbyshire SK17 9RZ
Telephone +44 (0) 1298 766600 Fax +44 (0) 1298 766601
e-mail info@baseefa.com web site www.baseefa.com
Baseefa is a trading name of Baseefa Ltd
Registered in England No. 4305578. Registered address as above.

ATEX Special Conditions for Safe Use

Sensor:
The integral supply cable is to be protected from impact and be suitably terminated.

The attachment thread has a 3mm wide undercut. This shall be taken into consideration if the sensor is attached to a flameproof enclosure in order to maintain the minimum engaged thread length.

Equipotential bonding shall be provided by the mounting arrangements.

The sensor cartridge to housing joint maximum gap is 0.035mm which is less than that permitted. This joint shall not be enlarged in service.

When fitted with the supplied weather guard, the sensor head must be mounted so that the sinter is pointing downward to provide ingress protection IPX6

The weather guard is a potential electostatic charging hazard. The manufacturer's instructions should be observed

18.4 International IEC

IEC Ex for Transmitter

IECEx Certificate of Conformity

INTERNATIONAL ELECTROTECHNICAL COMMISSION
IEC Certification Scheme for Explosive Atmospheres
for rules and details of the IECEx Scheme visit www.iecex.com

Certificate No.:	IECEx BAS 08.0072	Issue No.: 0	Certificate history:
Status:	Current		
Date of Issue:	2008-11-10	Page 1 of 3	

Applicant: **Honeywell Analytics**
405 Barclay Boulevard
Lincolnshire
Illinois
60069
United States of America

Electrical Apparatus: **A Type XCD Transmitter**
Optional accessory:

Type of Protection: **Flameproof**

Marking: **Ex d IIC Gb T6 (Ta -40°C to +65°C)**
Ex tb IIIC T85°C Db IP66

Approved for issue on behalf of the IECEx Certification Body: R S Sinclair

Position: Managing Director

Signature:
(for printed version)

Date: 10/11/08

1. This certificate and schedule may only be reproduced in full.
2. This certificate is not transferable and remains the property of the issuing body.
3. The Status and authenticity of this certificate may be verified by visiting the Official IECEx Website.

Certificate issued by:

Baseefa
Rockhead Business Park
Staden Lane
Buxton
Derbyshire
SK17 9RZ
United Kingdom

Baseefa

IEC Ex for Sensor

IECEx Certificate of Conformity

INTERNATIONAL ELECTROTECHNICAL COMMISSION
IEC Certification Scheme for Explosive Atmospheres

for rules and details of the IECEx Scheme visit www.iecex.com

Certificate No.:	IECEx BAS 08.0104X	Issue No.:0	Certificate history:
Status:	Current		
Date of Issue:	2009-03-09	Page 1 of 3	

Applicant:
Honeywell Analytics
405 Barclay Boulevard
Lincolnshire
Illinois
60069
United States of America

Electrical Apparatus: **A Type XCD Gas Sensor Head**
Optional accessory:

Type of Protection: **Flameproof and Dust**

Marking: **Ex d IIC T6 (Ta -40°C to +65°C) Gb**
Ex tb IIIC T85°C Db IP6X A21

Approved for issue on behalf of the IECEx Certification Body: R S Sinclair

Position: Managing Director

Signature: (for printed version)

Date: 10-3-09

1. This certificate and schedule may only be reproduced in full.
2. This certificate is not transferable and remains the property of the issuing body.
3. The Status and authenticity of this certificate may be verified by visiting the Official IECEx Website.

Certificate issued by:

Baseefa
Rockhead Business Park
Staden Lane
Buxton
Derbyshire
SK17 9RZ
United Kingdom

Baseefa

18.5 Sensepoint XCD ATEX Name Plate

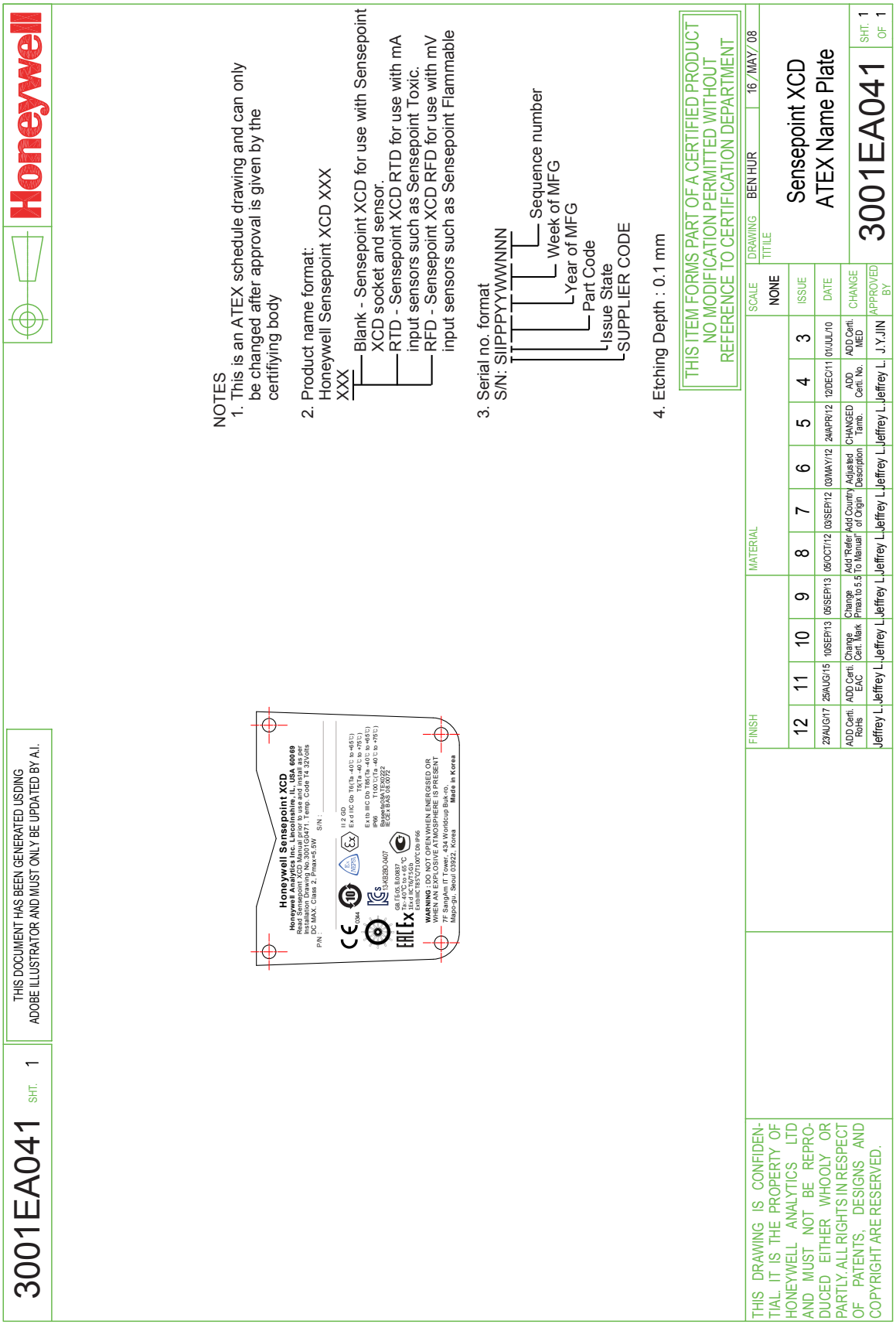

18.6 Sensepoint XCD UL Name Plate

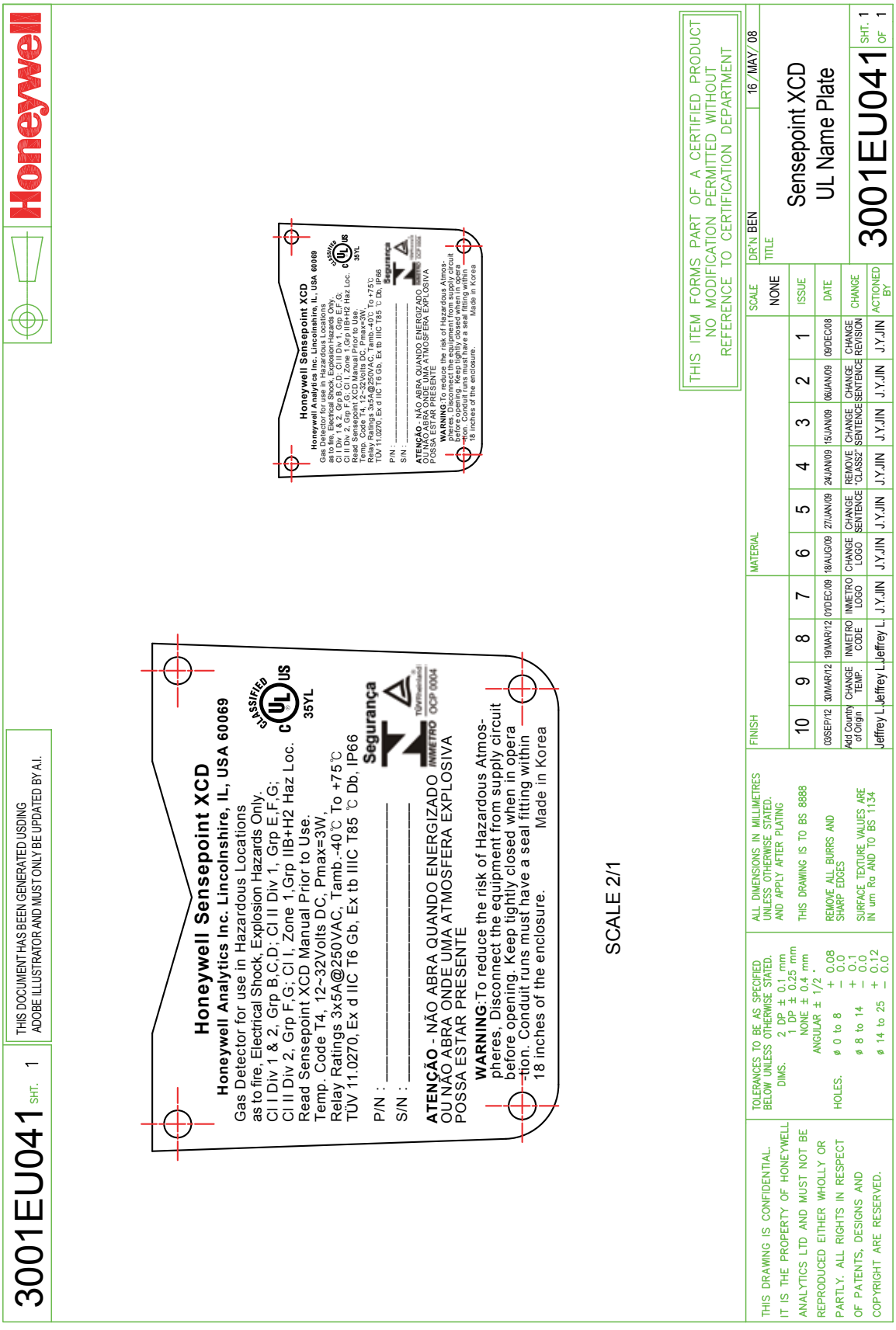

18.7 Sensepoint XCD Warning Tag

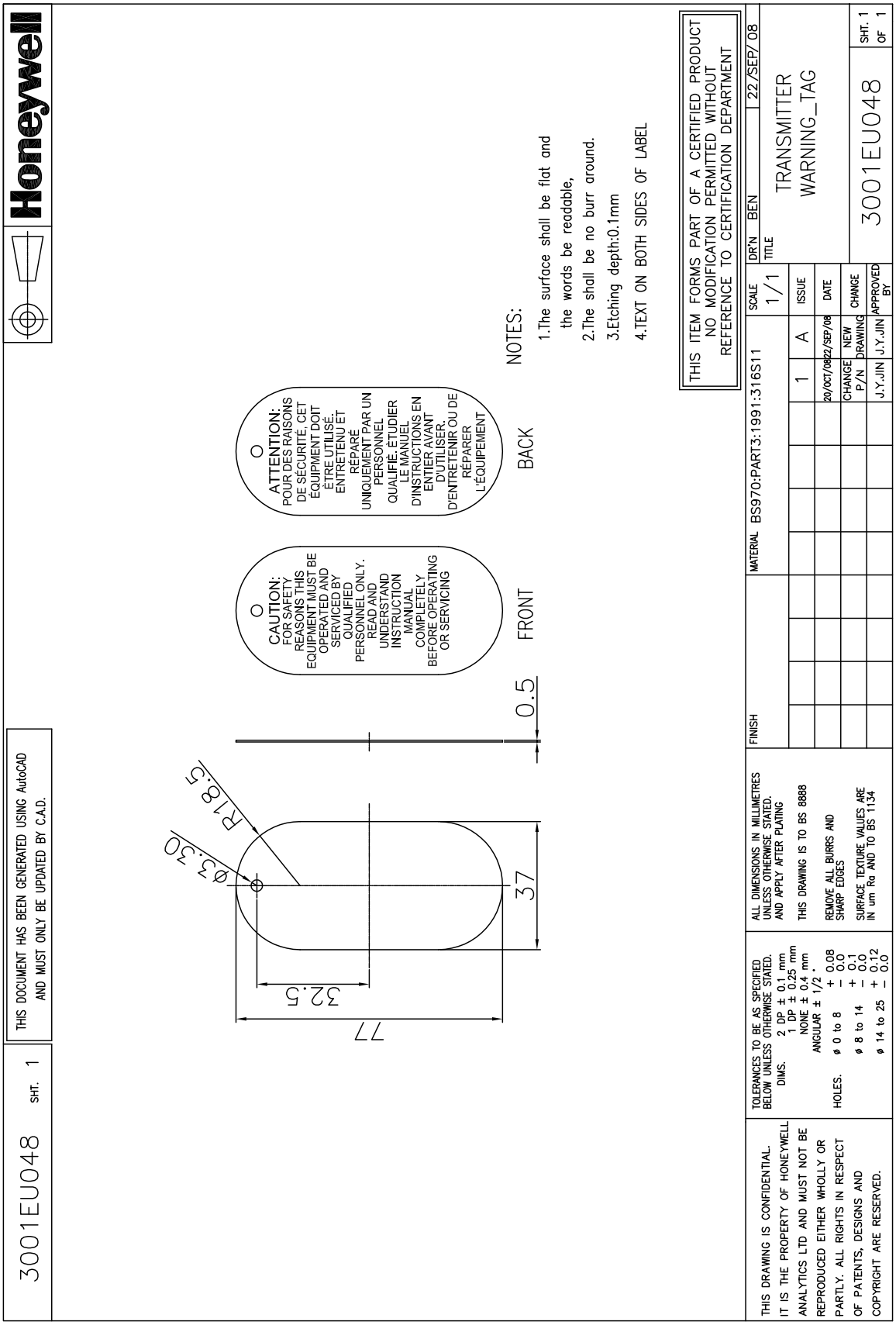

18.8 Sensor Cartridges Label

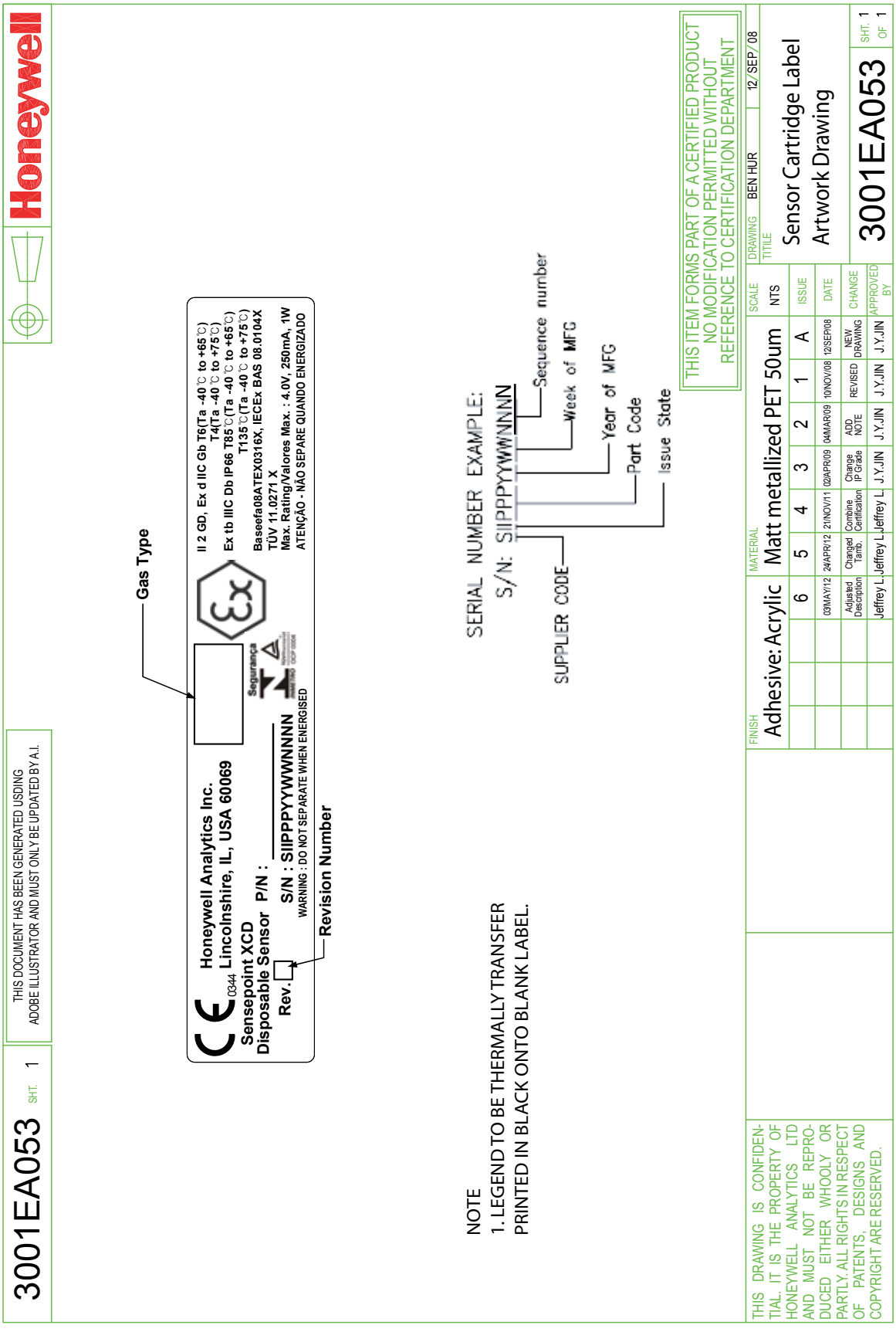

18.9 EC Declaration of Conformity

A full EC declaration of conformity is available on the CD accompanying the product. This document lists the European Standards with which the Sensepoint XCD complies.

19 Cross Interference and Cross Calibration

19.1 Cross Interference Table for Toxic and Oxygen

This below table shows the relative cross sensitivity of the Sensepoint XCD to other gases. “Gas Type” indicated the XCD sensor type fitted to the XCD. “Gas Type Applied” indicates the gas that may be applied to that sensor and the resulting Reading.

Gas type	Gas Type Applied	Concentration	Unit	Reading	Unit
O_2	Carbon Dioxide	5	%vol	0.1	%vol (change O_2 reading) per %vol CO_2
H_2S	Ammonia	50	ppm	0	ppm H_2S
	Carbon Monoxide	100	ppm	<2	ppm H_2S
	Carbon Dioxide	5000	ppm	0	ppm H_2S
	Chlorine	0.5	ppm	0	ppm H_2S
	Ethylene	100	ppm	0	ppm H_2S
	Hydrogen	100	ppm	0	ppm H_2S
	Hydrogen Sulfide	10	ppm	10	ppm H_2S
	Nitrogen Monoxide	25	ppm	0	ppm H_2S
	Nitrogen Dioxide	3	ppm	0	ppm H_2S
	Sulfur Dioxide	2	ppm	0	ppm H_2S
CO	Acetone	1000	ppm	0	ppm CO
	Acetylene	40	ppm	80	ppm CO
	Ammonia	100	ppm	0	ppm CO
	Carbon Monoxide	100	ppm	100	ppm CO
	Chlorine	2	ppm	0	ppm CO
	Ethanol	2000	ppm	3	ppm CO
	Ethylene	100	ppm	85	ppm CO
	Hydrogen	100	ppm	20	ppm CO
	Hydrogen	25	ppm	0	ppm CO
	Iso-Propanol	200	ppm	0	ppm CO
	Nitrogen Monoxide	50	ppm	8	ppm CO
	Nitrogen Dioxide	800	ppm	20	ppm CO
	Sulfur Dioxide	50	ppm	0.5	ppm CO
H_2	Carbon Monoxide	300	ppm	≤60	ppm H_2
	Hydrogen Sulfide	15	ppm	<3	ppm H_2
	Sulfur Dioxide	5	ppm	0	ppm H_2
	Nitrogen Monoxide	35	ppm	»10	ppm H_2
	Nitrogen Dioxide	5	ppm	0	ppm H_2
	Chlorine	1	ppm	0	ppm H_2
	Hydrogen Cyanide	10	ppm	»3	ppm H_2
	Hydrogen Chloride	5	ppm	0	ppm H_2
	Ethylene	100	ppm	»80	ppm H_2

19.2 Cross Calibration Flammable Gas Detector (Not tested as part of the performance approval)

For greater accuracy, a catalytic gas detector should be calibrated using a certified gas/air mixture equal to 50% LEL of the actual target gas intended to be monitored.

However, it is not always practical to obtain every detectable type of hydrocarbon gas in a calibration-ready, certified and verifiable form. Therefore, it is possible to carry out a “cross calibration” using another hydrocarbon gas/air mixture.

When the Sensepoint XCD Combustible LEL sensor is to be calibrated with a gas which is different to the gas or vapour to be detected, the following cross calibration procedure may be followed:

Caution: Where the user calibrates any sensor using a different gas, responsibility for identifying and recording calibration rests with the user. Refer to the local regulations where appropriate.

Notes:
1. Table 14 lists a selection of hydrocarbon compounds and states a reference figure or “Star Rating” according to the reaction they produce in relation to other hydrocarbons.
2. An eight star (8) gas produces the highest output, while a one star (1*) gas produces the lowest output.*

No.	Gas	Star Rating
1	Acetone	4*
2	Ammonia	7*
3	Benzene	3*
4	Butanone	3*
5	Butane	4*
6	Butyl acetate	1*
7	Butyl acrylate	1*
8	Cyclohexane	3*
9	Cyclohexanone	<1*
10	Diethyl ether	4*
11	Ethane	6*
12	Ethanol	5*
13	Ethyl acetate	3*
14	Ethylene	5*
15	Heptane	3*
16	Hexane	3*
17	Hydrogen	6*
18	Methane	6*
19	Methanol	5*
20	MIBK	3*
21	Octane	3*
22	Pentane	3*
23	Propane	5*

24	Propan-2-ol	4*
25	Styrene	2*
26	Tetra hydrafuran	4*
27	Toluene	3*
28	Triethylamine	3*
29	Xylene	2*

Table 14 . Star Rating of Gases

To cross calibrate the Sensepoint XCD flammable gas detector:
(1) Obtain the star rating for both the calibration test gas and the gas to be detected from Table 14
(2) These values may then be used in Table 15 to obtain the required calibration span setting when a 50% LEL test gas is applied to the detector.

*Rating of Calibration Gas	*Rating of Gas to be Detected							
	8*	7*	6*	5*	4*	3*	2*	1*
8*	50	62	76	95	-	-	-	-
7*	40	50	61	●	96	-	-	-
6*	33	41	50		78	98	-	-
5*	26	33	40	50	63	79	100	-
4*	21	26	32	40	50	63	80	-
3*	-	21	26	32	40	50	64	81
2*	-	-	-	25	31	39	50	64
1*	-	-	-	-	25	31	39	50

Note: These settings must only be used with a calibration gas concentration of 50% LEL.
Table 15. Calibration span setting

(3) If a sensor is to be used to detect a gas other than that for which it was calibrated and there is no intention to use an equivalent calibration gas to re-calibrate the sensor, then the required correction factor may be obtained from Table 16.

The reading shown on the gas detector controller or transmitter display should be multiplied by this number in order to obtain a more accurate gas concentration result.

Sensor calibrated to detect	Sensor used to detect							
	8*	7*	6*	5*	4*	3*	2*	1*
8*	1.00	1.24	1.52	1.89	2.37	2.98	3.78	4.83
7*	0.81	1.00	1.23	1.53	1.92	2.40	3.05	3.90
6*	0.66	0.81	1.00	1.24	1.56	1.96	2.49	3.17
5*	0.53	0.66	0.80	1.00	1.25	1.58	2.00	2.55
4*	0.42	0.52	0.54	0.80	1.00	1.26	1.60	2.03
3*	0.34	0.42	0.51	0.64	0.80	1.00	1.27	1.62
2*	0.26	0.33	0.40	0.50	0.63	0.79	1.00	1.28
1*	0.21	0.26	0.32	0.39	0.49	0.62	0.78	1.00

Table 16. Correction factors

Notes:
1. Since catalytic sensors require oxygen for correct operation, a mixture of gas in air should always be used for calibration purposes.
2. Assuming average performance of the sensor, the sensitivity information in Tables 14 To 16 is normally accurate to + or - 30%.

Working Example:
If the target gas to be detected is 0-100%LEL Ethylene and the only calibration gas available to re-calibrate the sensor is Methane (at 50% LEL concentration), the procedure is as follows:
(1) Look up the star rating for each gas in Table 14:

Gas No. 14, Ethylene = 5*
Gas no. 18, Methane = 6*

(2) Then, look up the span settings for a 50% LEL calibration gas in Table 15 by selecting the row of figures next to the 6* in the “calibration gas” column. Select the figure in the 5* column of the “gas to be detected” section. The figure is 62.

(3) This means that during re-calibration, the span gas setting on the gas detector transmitter or controller should be set to 62% LEL to give an accurate measuring scale for 0-100%LEL Ethylene, when using 50% LEL Methane as the calibration gas.

Please contact your local Honeywell Analytics sales or service distributor, or regional office should further clarification or additional information be required.

19.3 Meter Multiplication Factors for Sensepoint XCD-IR Propane

It is possible to apply a linear cross reference factor to the output of a sensor characterized for propane and achieve the results shown in the graph below.
Reasonable accuracy is maintained to at least the 50% LEL equivalent values of the cross-referred gasses.

XCD IR Propane Sensor (Full scale 2% Vol/100%LEL)

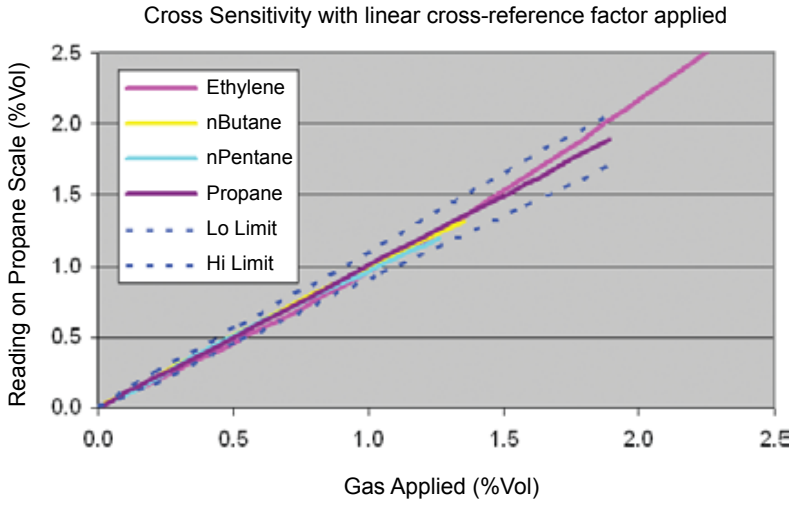

Diagram 18. Sensepoint XCD-IR (Propane) Sensor with linear cross-reference factor applied

Use the following multiplying factors to cross-refer to the propane reading:

Gas	Multiplication Factor
Ethylene	3.43
nButane	0.97
nPentane	0.89

Table 17. Multiplying Factors

Caution: These factors only apply to gas concentrations expressed in % Volume terms. When using a linear cross reference factor the temperature compensation is based upon propane, and there may be errors at temperatures away from the calibration temperature.

NOTE
Honeywell Analytics recommends that users verify the accuracy of their instruments using test gasses wherever possible. Cross-referred measurements should be used as a guide only, not as absolute values.

XCD Transmitter

Appendix A - Modbus® Protocol A-2

A.1 Modbus and the XCD

The XCD gas detector may be fitted with the optional Modbus board. Authoritative information on the MODBUS Upgrade Kit can be found at www.modbus.org. The XCD supports Modbus/RTU over an RS-485 physical layer. The interface is isolated and includes a switchable 120 Ohm termination resistor. Baud rates 9600 or 19,200 are supported with 19,200 as the default. Most of the operations that are possible with local user interfaces can also be performed using the Modbus interface. This includes configuration operations. However, this Appendix only describes how to monitor XCD status using Modbus.

See Section 4.1.1 for information on installing the optional Modbus hardware. See Section 4.1.1 Configure Menu – Set ID Settings for information on setting the Modbus baud rate and Parity using the local user interface.

A.2 Modbus Registers

ModBus Register Address	Information	R/W	Type	Size	Note
30001	Main SW Version of XCD	R	u8	1	
30002	EEP Version of XCD	R	u8	1	
30003	WatchDog s/w Version of XCD	R	u8	2	
30004	Location string	R	string[12]	6	
30010	ModBus slave ID	R	u8	1	
30011	Monitor Status	R	u16	1	Upper byte : Function Lower byte : Instrument Mode
30012	Inhibit current(mA)	R	u8	1	20 means 2.0mA
30013	Reserved	R	u16	1	
30014	Active Alarm	R	u32	2	bit 0 Alarm 1 is active bit 1 Alarm 2 is active
30016	Latched Alarm	R	u32	2	bit 0 Alarm 1 is active bit 1 Alarm 2 is active
30018	Active Fault	R	u32	2	Upper Byte: fault Lower Byte:warning Bit 0:W1~Bit 6:W6 Bit 7:F1~Bit 11:F5
30020	Latched Fault	R	u32	2	Upper Byte: fault Lower Byte:warning Bit 0:W1~Bit 6:W6 Bit 7:F1~Bit 11:F5
40001	Systern ID code	R	u16	1	Upper Byte : Type Code : 0x25 Lower Byte : My Address
40002	Systern ID code	R	u16	1	Upper Byte : Type Code : 0x25 Lower Byte : My Address : Dummy Spacer
40003	Gas reading	R	f32	2	
40005	Fault and Warning	R	u8	1	Fault = 1100 + Number Warning = Number as is
40006	Alarm, fault and warning state	R	u8	1	bit 0 Alarm 1 is active bit 1 Alarm 2 is active bit 2,3 for future expansion bit 4 Warning is active bit 5 Fault is active bit 6,7 for future expansion Note: Latching relay setting latches Modbus values in register 40006.
40007	Monitor state monitering	R	u8	1	1 : Normal 2 : Warm Up after power on 3 : Inhibit 12 : Calibration
40008	Reserved	R	u16	1	
40009	Calibration Due	R	f32	2	
40011	Measuring Unit	R	u8	1	4 : PPM 3 : %Vol 5 : %LEL 1 : mg/m3v
40012	Peak Reading	R	f32	2	Peak Reading
40014	Reserved	R	u16	3	
40017	Temperature (°C)	R	s16	1	
40018	Reserved	R	u16	28	
40046	Measuring Gas name string	R	string[14]	7	
40053	Reserved	R	s16	1	
40054	Temperature (°F)	R	s16	1	
40055	Reserved	R	u16	1	
40056	Relay Status	R	u8	1	1 : Energized, 0 : De-energized
40057	Power Supply	R	f32	2	
40059	Calibration Interval	R/W	u16	1	
40060	Alarm Type	R/W	u8	1	High nibble : Alarm 2 Type Low nibble : Alarm 1 Type 0: Disable, 1: Rising, 2:Falling
40061	Inhibit timeout	R/W	u16	1	
40062	Relay configuration	R/W	u8		Bit: 0 ~ 2: Relay Type1 ~ Relay Type3 Bit: 3~5 : Relay Sstatus1 ~ Relay Status 3 Bit: 6 : Relay Latch Status

Find out more
www.honeywellanalytics.com

Contact Honeywell Analytics:

Europe, Middle East, Africa, India
Life Safety Distribution AG
Javastrasse 2
8604 Hegnau
Switzerland
Tel: +41 (0)44 943 4300
Fax: +41 (0)44 943 4398
India Tel: +91 124 4752700
gasdetection@honeywell.com

Americas
Honeywell Analytics Inc.
405 Barclay Blvd.
Lincolnshire, IL 60069
USA
Tel: +1 847 955 8200
Toll free: +1 800 538 0363
Fax: +1 847 955 8210
detectgas@honeywell.com

Asia Pacific
Honeywell Analytics Asia Pacific, Co., Ltd.
7F SangAm IT Tower
434 Worldcup Buk-ro, Mapo-gu
Seoul 03922
South Korea
Tel: +82 (0)2 6909 0300
Fax: +82 (0)2 2025 0329
analytics.ap@honeywell.com

Technical Services
EMEAI: HAexpert@honeywell.com
US: ha.us.service@honeywell.com
AP: ha.ap.service@honeywell.com

www.honeywell.com

Please Note:
While every effort has been made to ensure accuracy in this publication, no responsibility can be accepted for errors or omissions. Data may change, as well as legislation and you are strongly advised to obtain copies of the most recently issued regulations, standards and guidelines.This publication is not intended to form the basis of a contract.

Issue 9 08/2017
3001M5001_ECR HAA170020
SPXCDHMANEN
MAN0873_EMEAI
© 2017 Honeywell Analytics

Honeywell

12573